Leaders in pump innovation

Company Brochure

APE pumps

Mather+Platt

We are proudly:



SABS
ISO 9001.2015





Contents

	Page
Company Profile	1
Vertical Industrial Turbine Pumps	6
CNE Vertical Mixed Flow Pumps	11
Split Casing Pumps	20
Single Stage Split Casing Pumps	26
Two Stage Split Casing Pumps	31
End Suction Pumps	35
Multi-Stage High Pressure Pumps	40
High Head Multi-Stage Pumps	43
General Information	47
Company Details	56

*All information contained in this brochure is subject to change without prior notice. E & OE.

Company Profile

APE Pumps benefits from a long historical legacy of leadership and innovation in the pump engineering industry.

With 70 years behind us, the vision of our founders and our history represent an incredible foundation for our company, an underpinning which gives us confidence, strength an insight as we continue to be a leader in the growing premium pump engineering industry.

APE Pumps has an innovative, cutting edge products already being hailed as the best in its class. With an experienced, close-knit team of engineers, business people and specialists, we have the expertise to meet shifting market demands.

Through our highly flexible and ultramodern production facilities, we have developed unique skills which are manifested in the design and manufacture of pumps specially engineered to suit all conditions. We have the internationally recognised ISO 9001.2015 accreditation which includes a complete calibration and various test facilities to cover all aspects of our manufacturing processes.

APE Pumps and spares are being supplied to many institutions and industries including:
- Municipalities
- Mining
- Pulp and Paper
- Mineral Benefactions
- Ports and Harbours
- Water Authorities
- Consulting Firms
- Power Generation
- Petrochemical Industries

In every aspect of our business, we are now able to respond even faster than ever before to changing client's needs. This is true not only for our consulting expertise, orders processing and delivery levels, but also for after sales service including maintenance, repairs and spare parts supply. In addition, we have carved a niche for ourselves with customer orientated documentation, professional software and individually designed training courses.

By offering service levels that are unprecedented in the marketplace, we have made a total commitment to remaining a top company in all areas of our operation.

Turnkey Solutions:
- In-house Service and Repair Facility
- On Site Installation
- Service Training
- Service Level Agreement
- 8 ME Contractor
- Design, Supply, Manufacture, Installation, Commissioning and Alignment

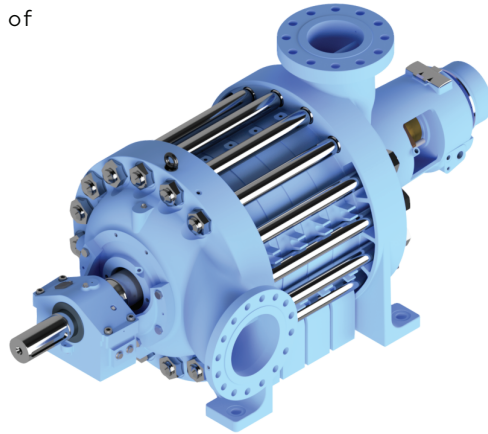

70 Years of Serving the Pump Industry

1952
APE Pumps is set up under the Sangus.

1953
Introduction of the Sangus range of submersible pumps.

1965
The Introduction of the APE split case range from 50mm to 450mm.

1970
Introduction of the APE Nimbus end suction 80mm to 300mm.

1974
Introduction of the APE range of end suction pumps from 32mm to 150mm.

1977
Introduction of the Byron Jackson petrochemical range.

Introduction of the APE vertical turbine range of pumps from 150mm to 1 100mm.

1980
Introduction of the APE submersible range dewatering pumps.

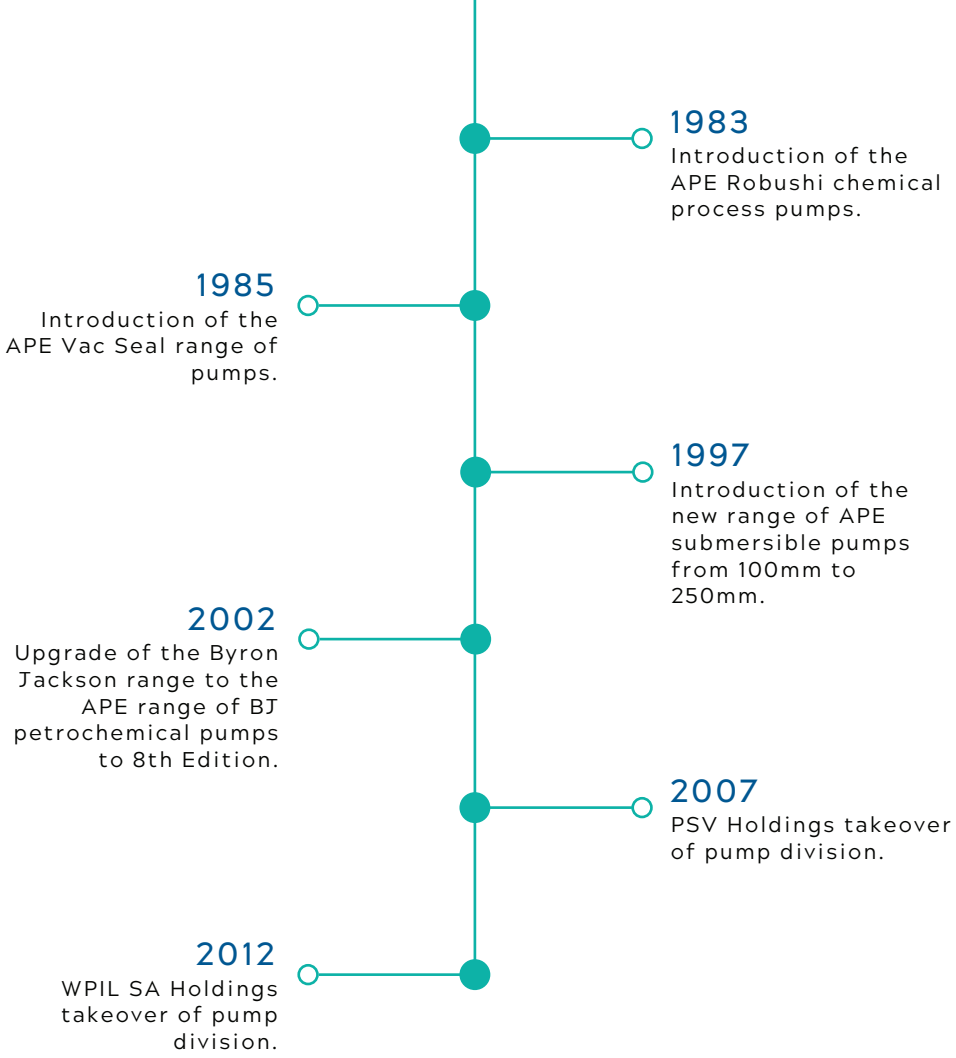
1983
Introduction of the APE Robushi chemical process pumps.
1985
Introduction of the APE Vac Seal range of pumps.
1997
Introduction of the new range of APE submersible pumps from 100mm to 250mm.
2002
Upgrade of the Byron Jackson range to the APE range of BJ petrochemical pumps to 8th Edition.
2007
PSV Holdings takeover of pump division.
2012
WPIL SA Holdings takeover of pump division.

APE Pumps Group Benchmarks

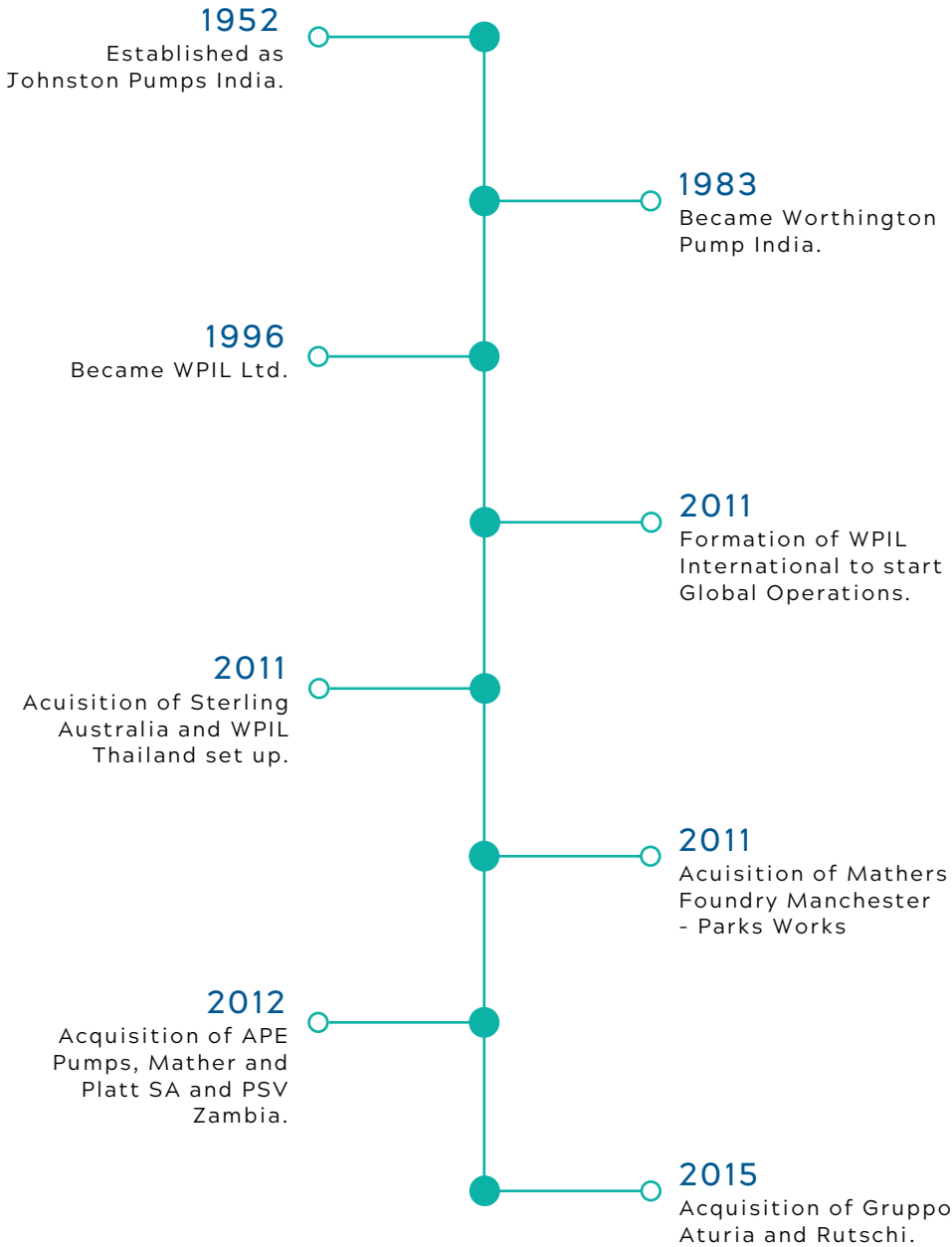


UK
Mathers Foundry
India
Mody Industries
WPIL Limited
Italy
Gruppo Aturia
Singapore
WPIL
Dubai
Global Pump
Thailand
WPIL
Zambia
PSV Limited
Australia
Sterling Pumps
South Africa
WPIL SA Holdings Pty. Ltd.
APE Pumps

Vertical Industrial Turbine Pumps

Applications

The pumps can be used in any industrial or agricultural application.

They can be used in:
- Steel Works
- Chemical Process Plant
- Effluent Disposal
- Cooling Water Circulation
- Irrigation
- Water Works and Raw Water Supply
- Shaft Sinking and Dewatering
- Pipeline Booster and Transfer Service
- Condensate Extraction

Features

1. Civil work is easier and cheaper.
2. Installation is easier.
3. There is no suction valve with consequent cost and pressure loss savings.
4. Efficiencies are as good as any.
5. NPSH problems are eliminated.
6. Space is saved and by using weather proof motors, there is no necessity for a building to be erected.
7. There is no danger of flooding the electrics.
8. By adding stages, a very wide range of duties can be covered with standard parts, thus making for cheap and readily available spares.
9. The pumps generally have a non-overloading KW characteristic and a steep head quantity curve.
10. There are no radical loads on the bearings or glands, so they last longer and maintenance is reduced.
11. In dirty water, grit tends to fall vertically out of the wear areas and so does less damage.

Specifications

The material and assembly are selected from a number of standard variations to suit the particular application.

The castings are generally made in a high quality close-grained cast iron and have long radius water passages to give the best performance in terms of efficiency and life. Casting in bronze and stainless steel are also available.

The impellers are of mixed flow design and can be either open-vane or shrouded, depending on the size. Then shrouded impellers have long suction eye rings, to give good life and performance. They are usually fitted to the shaft by means of a trapper sleeve, using a key when the load requires it.

The shaft is stainless steel, running in bearings chosen to suit the application. These include flutes cutless rubber and bronze. They can be product-lubricated or pressure-FED grease-lubricates.

The column pipe is either screwed or flanged steel suitably protected for the application. The bearing spiders are of high grade cast iron and the bearing bushes are as used in the pump. The line shafting can be product-lubricated or enclosed in a cover tube with oil, water or grease-lubricated.

The discharge head is either a rigid cast iron or fabricated steel bend with spigotted seats for the thrust bearing and drive motor stool. It contains the housing for the stuffing box.

Soft packed glands, mechanical

Versatility of Installation

Soft packed glands, mechanical seals, or a glandless arrangement can be offered.

The pumps are designed for any type of drive:
- Electric Motor
- Belt Drive
- Gear Drive
- Engine or Steam Turbine

They can be suspended in wet sumps, boreholes, rivers, steel tanks or dams; in dry pits with a suction pipe connected to the bellmouth or as a “pot” pump with various positions of the inlet and outlet branches.

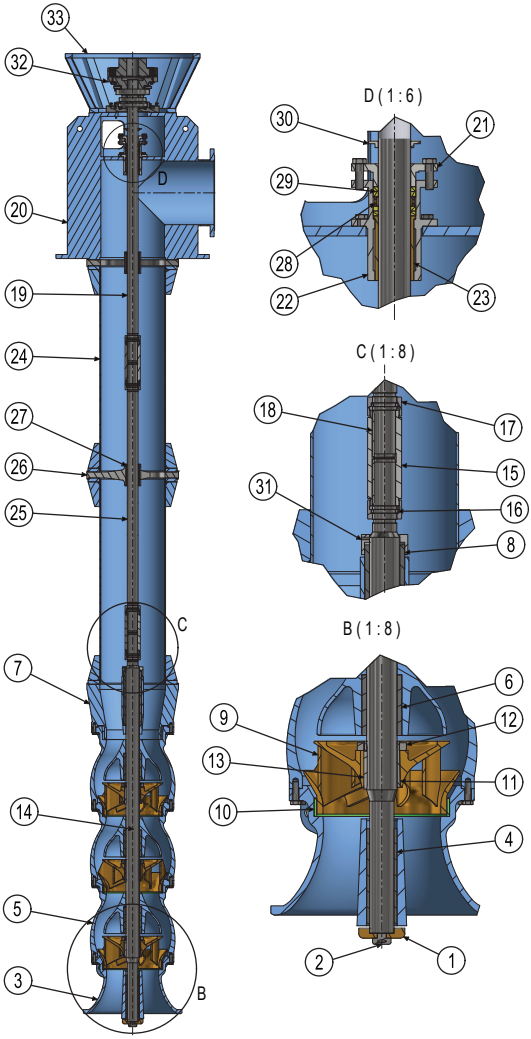

Parts List		
Item	QTY	Part
1	1	Upthrust Collar
2	1	Upthrust Collar Bolt
3	1	Bottom Section
4	1	Bottom Section Bush
5	3	Mid Section
6	3	Mid Section Bush
7	1	Top Section
8	1	Top Section Bush
9	3	Impeller
10	3	Wear Ring
11	3	Taper Sleeve
12	3	Taper Sleeve Lock Nut
13	3	Impeller Key
14	1	Pump Shaft
15	2	Muff Coupling
16	4	Muff Coupling Split Ring
17	4	Muff Coupling Nut
18	4	Muff Coupling Key
19	1	Head Shaft
20	1	Discharge Head
21	1	Gland
22	1	Stuffing Box
23	1	Stuffing Box Bush
24	2	Column
25	1	Lineshaft
26	2	Spider
27	2	Spider Bush
28	1	Lantern Ring
29	4	Gland Packing
30	1	Water Flinger
31	1	Sand Flinger
32	1	Thrust Assembly
33	1	Motor Stool

Typical Installations

1. Cooling Tower Recirculation
   - Eliminate priming problems; multi-staged to suit pressure requirements.
2. Raw Water
   - The pot pump is ideal for raw water intake, and simplifies structures.
3. Primary Fuelling Service
   - Volatile fluids require submerged pump units.
4. Transfer Service
   - Self-contained unit is ideal for L.P. gas transfer.

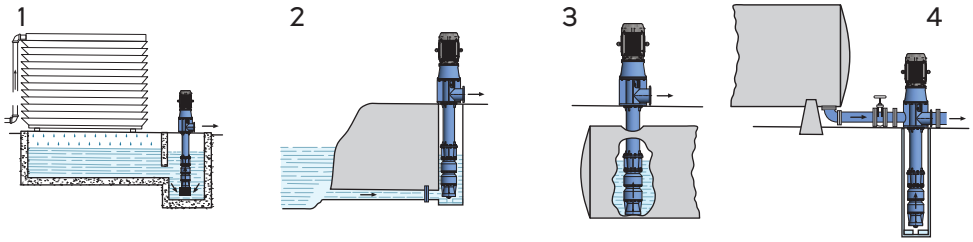

As a “Pot” Pump

The “pot” pump is particularly useful for inline boosting. It requires no priming and to a limited extent it is self-priming. It conserves space and requires minimum civil work and operational maintenance.

By reversing the pump bowls, the flow direction is reversed and low pressure glands result, even in very high pressure boosting applications.

In other applications it can be made completely glandless.

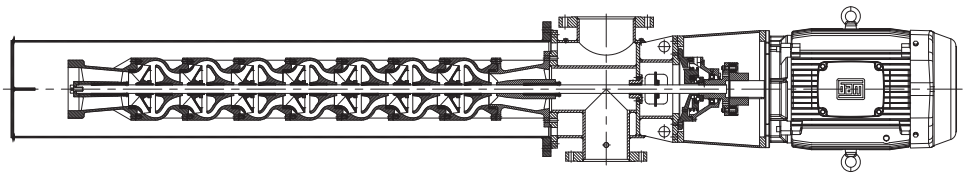

Sump Design

These sketches show some established criteria for proper sump design. These include submergence, clearance from the floor and walls. Spacing between the units when more than one pump is involved, and flow distribution and velocities.

Standard dimension charts are available for the range of pumps, giving clearances from the sump walls and the minimum submergence to retain optimum pump performance. These apply to cold water at sea level.

A

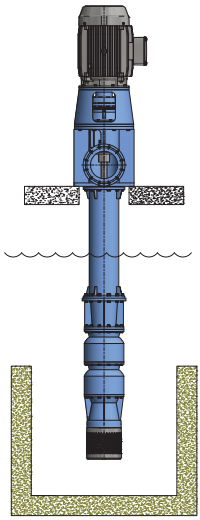

Discharge Head Option

B

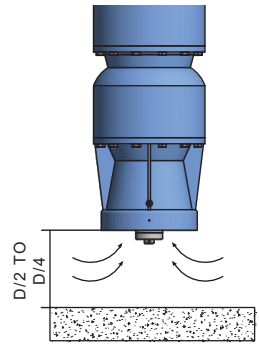

C

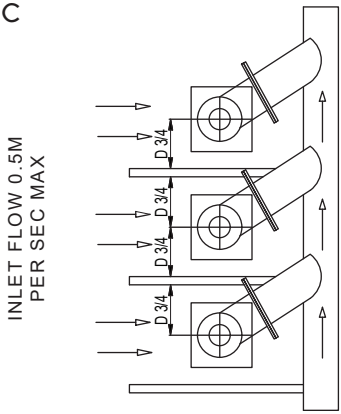

Sump Design Minimum Guide

D

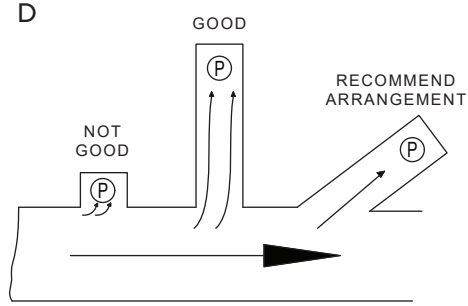

Preferred Piping Arrangement

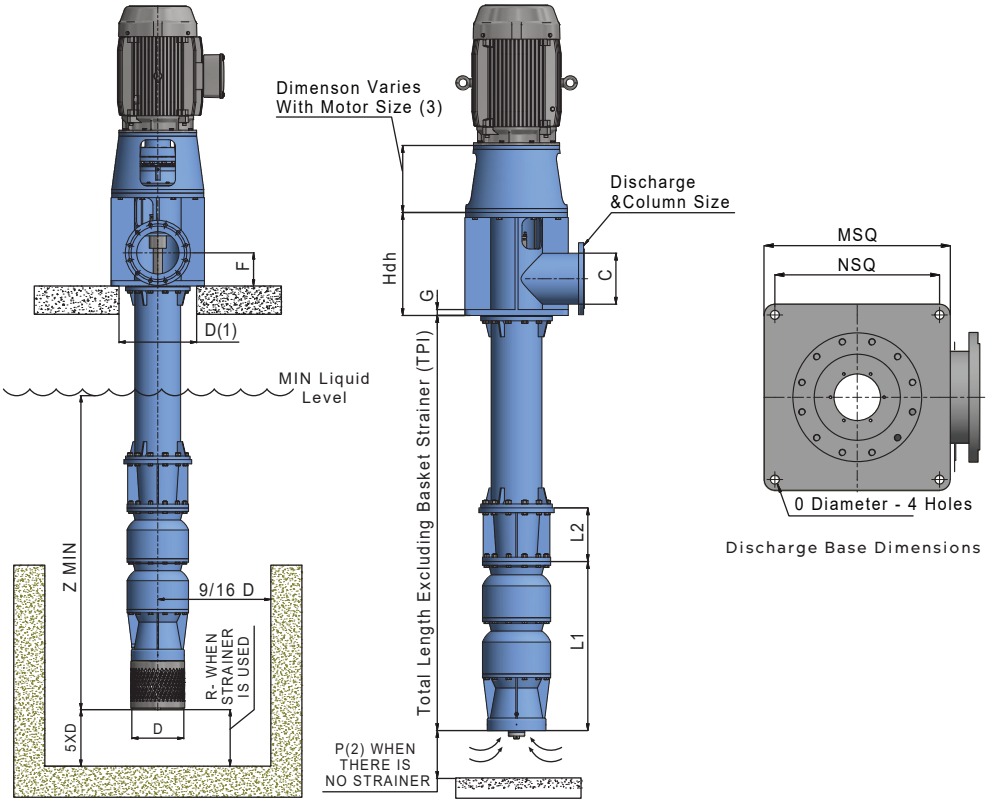

Discharge Base Dimensions

Pump Size	Discharge & Column Size C	Standard Flange Rating	Bowl Length		Max. Pump Area	Discharge Head								Option Strainer				Weights KG		
			1 st Stage L1	Add Stage L2		Hdh	D(1)	E	F	G	M	N	O	P(2)	Lstr	R	Z min	THR.ASSY DIS Head 1-st. Bowl Strainer	ADD Bowl	Column Per M Length
Model 6870 - Screwed Columns																				
6LC	80		493	146	165	321	178	203	98	19	343	260	14	75	127	64	480	140	9	22.4
6MC	100		491	146		354	265	260	125	22			20				510	154	9	22.4
6HC			504	159			265										535	159	11.5	22.4
8MC			576	143	216	394	350	300	155		500	400	28	100	165		585	229	18	32.8
8HC	150		637	178													635	329	18	32.8
10W/0			670	181	254		350							150	203	76		366	34	32.8
Model 6920 - Flanged Columns																				
12HC	200		823	248	356	498	405	305	168	38	533	457	28	150	250	76	760	460	59	62
14HC	250		889	289	425	552	480	381	203		635	559		180	254		890	740	75	84
16HC			899	324										200	254		995	832	136	91
18HC	300		1069	359	483	658	540	432	235		660	584	32	230	343		1100	982	140	144
18XHC	350		1027	416	562	754	620	428	320		712	630		250	348		1120	1352	159	147
28HC	450		1397	523	698	1105	750	508	450		1016	864		330	380	100	1170	1966	455	169
32HC	500		1675	616	815	1205	890		508		1092	940	38	380	380		1270	2500	780	208
32XHC	600		1640	711	942	1350	1020	760	609		1420	1270		400	394		1320	2581	750	214
36XHC	700		1697	797	942	1444	1050		648	40				430	394		1470	3193	1000	220

*Pump Dimensions (Not to be used for construction purposes)

Pump Performance

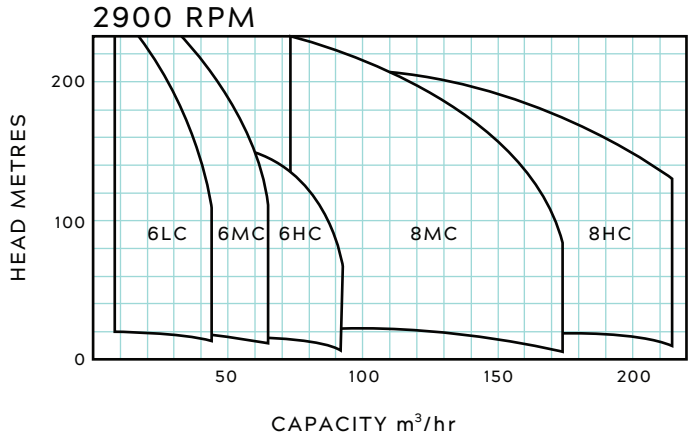

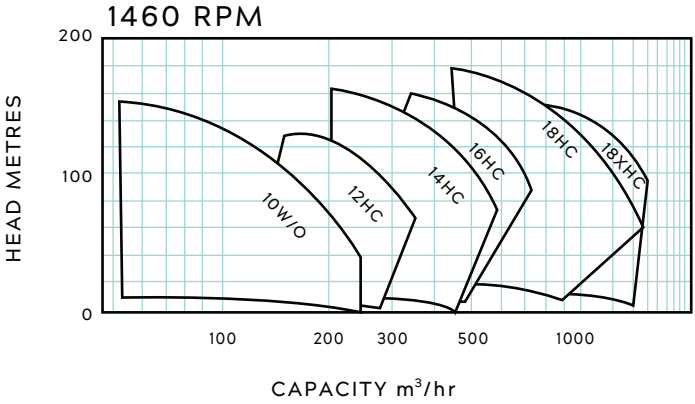

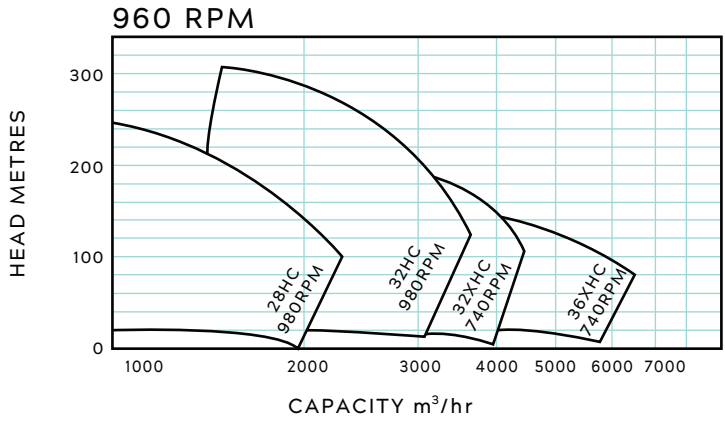

CNE Vertical Mixed Flow Pumps

The CNE pump is a vertical multistage turbine pump which has been developed for medium to high pressure application and is available with conventional mounting arrangement or fitted into a caisson or “can”.

The main advantage of the CNE pump, when fitted in a caisson, are the low NPSH requirement at the inlet flange and the small amount of floor space taken up by the pump.

Types and Applications

CNE pumps are available in three main types: the basic XF design, and the caisson-fitted EF and TC versions. All share the same principal characteristics, with variations in detail to suit particular applications.

XF - Applications include industrial and water supply: available in wet well or dry well form.

EF - Power station, oil field and tank farm applications as boosters or main pumps

TC - This version of the range is same as the EF design but embodies the features which are called for as requirements in A.P.I.610 standard specification.

Range of Duties

With standard electric motor drive:
Throughputs up to 7000 Imp. Gal./min. (1900 m^3/h) at 50 Hertz speed
8400 Imp. Gal./min. (2280 m^3/h) at 60 Hertz
Generated heads up to 1000 ft. (305m)
Temperatures up to 150°C (302°F)
Pumps for handing larger capacities can be offered on application.

General

All Mather and Platt CNE pumps have a continuously rising characteristic curve.

The vertical design allows installation in a restricted space and once the pump is primed no further priming will be necessary. Special suction pipe arrangements are eliminated.

Castings

All castings are produced in local foundries and high quality casting techniques are employed to achieve clean internal passages for maximum efficiency in operation.

Accessibility

The motor coupling, the top combined thrust and radial bearing and the stuffing box are easily accessible through large hand holes in motor stool and discharge head.

Drives

Standard vertical solid shaft electric motors are the simplest and most commonly used form of drive. In the lower horsepower range hollow shaft motors can be supplied. Alternatively, when required the pumps can be driven by combustion engines or turbines through a right-angle gearbox.

Construction and Design Details

Discharge Head

The discharge head is either fabricated or cast in local foundries and is available in iron or steel. In the XF type it incorporates the delivery flange and the stuffing box and in the EF and TC designs the suction flange is also included. Mounted at floor level (on top of the caisson in the EF and TC designs), the discharge head supports the motor stool while the pump unit is suspended from its underside.

Motor Stool

The motor stool is a fabricated mild steel structure mounted on the top of the discharge head. It also carries the combined thrust and radial bearing of the pump.

Caisson (EF and TC)

Fabricated steel construction containing the complete pump assembly.

Bellmouth

The bellmouth is carefully designed to obtain favourable flow conditions in the liquid approaching the first stage impeller.

Bowls

Diffuser vanes, cast integrally in the pump bowl are matched carefully with the impeller. They are shaped to guide the flow to the next stage with a minimum loss. At the same time, they add substantially to the strength of the bowl. Each bowl also contains and a journal bearing.

Impeller

All impellers are of the closed type and in hydraulic balance. They are keyed to the pump shaft and axially located by interstage sleeves which at the same time act as bearing sleeves.

Rising Main Pipe

The column pipe is of flanged construction connecting the pump assembly with the discharge head. When required by the length of column, intermediate line shaft bearings are fitted and are clamped between the column flanges.

Shaft

The line shaft is accurately machined over its entire length and protected by the sleeves at all points of wear.

Wearing Parts

All CNE pumps are fitted with replaceable casing wear rings. If required impeller can also be supplied with wear rings which are shrunk onto the impeller necks and pinned in position. The shaft is protected by renewable sleeves in the areas of possible wear such as pump and line shaft bearings, leak-off bush and stuffing box. All wearing parts can easily be replaced to allow restoration of the original running clearances.

Glands

Stuffing boxes are designed so that either conventional packed glands or mechanical seal of all approved makes can be fitted, depending on application and customer's preference. For high pressures the stuffing box is fitted with a breakdown bush and the leakage fluid is returned to the

pump suction. Provision is made for seeing liquid connections fed from the pump discharge or an external supply.

Bearings

Pump and line shaft bearings are made of asbestos reinforced cresylic resin material (“Railko”) and are lubricated by the pumped liquid. The nature of this bearing material allows short periods of dry running, which enables the pump to be started without external pre-lubrication.

The pump thrust bearing carrying the rotating element and the hydraulic load is a standard tilting pad type combined thrust and radial bearings.This is a self-contained unit with all bearing surfaces running in an oil bath. Heavy duty ball or roller thrust bearings can be used on the smaller pumps in the range.

Optional Features

XF Type

- Underground discharge to suit customer’s installation.
- Thrust bearing built integrally with driving motor.
- Line shaft enclosed by tubing for clean water lubrication of bearings.
- Grease lubricated line shaft bearings.
- Water-cooled thrust bearing.
- Suction strainer.

EF and TC Types

- Underground discharge to suit customer’s installation.
- Specially designed suction impeller for even lower NPSH required, if depth of the caisson is limited.
- Thrust bearing built integrally with driving motor.
- Water-cooled thrust bearing.

Quality Control

We place the utmost importance on the effective control of quality standards since they are so vital to the ultimate performance and reliability of the finished product. In pursuance of this policy the Mather and Platt Quality Control Organisation is directly responsible to the Power Division Chief Executive and exercises its influence at all stages from pre-production to final performance testing and when called for installation and commissioning.

Manufacture

Rigorous standards of acceptance are applied to raw materials and to the inspection and testing of all components produced at Park Works or by our subsidiaries or by sub-contractors. Measuring equipment is rigidly controlled and services by our centralised Standards Room which also provides sub-contractors with equipment, when necessary, under the same servicing procedure.

Materials Testing

We are fully equipped to carry out destructive and non-destructive testing of materials and components, using the most up-to date techniques including ultrasonic and radiographic examination.

Hydrostatic and Performance Testing

All components subjected to internal pressure are hydrostatically pressure tested to values in excess of the maximum working pressures, according to their duties and to any special requirements. The Mather and Platt test bed facilities are fully capable of handling tests on most pumps at full load/full speed. Operating temperatures up to 260 C (500 F) can be achieved on a closed loop pipe system and injection and bleed connections in this system make it possible for negative thermal shock conditions to be realistically simulated.

Customer Inspection

By arrangement all stages of manufacture and testing may be witnessed by the customer's and their engineers.

Auxiliaries

To supplement our range of pumps we offer a variety of auxiliary equipment with characteristics designed to suit individual installation conditions.

Automatic Starting Devices
For bringing standby pumps into operation on loss of pressure.

Discharge Non-Return Valves
Instrument panels to suit customers' individual requirements.

Spare and Service

Every Mather and Platt pump is backed by an effective after-sales service organisation which is world-wide in scope and can draw upon the full engineering resources of the Mather and Platt Group. This Organisation offers:

1. A fast and efficient replacement parts service with top priority given to parts required in emergency.
2. Servicing on site anywhere in the world carries out by competent works-trained personnel.
3. Works overhaul and/or reconditioning of pumps at Mather and Platt factories. Proving test on rebuilt pumps can be carried out on our fully equipped test beds.
4. An advisory service for operational problems in any part of the world provided by a team of experienced technical service engineers.
5. An erecting and commissioning service undertaken by fully qualified engineering staff.

In addition to all these after-sales functions our Spares, Repairs and Service Department can provide technical and drawing office services for surveys of existing plant, modification or up-dating of existing plant; production of interchangeability charts and recommendations on stock holding of strategic spare parts.

Standard Materials

	XF	EF and TC
Bowls	Cast Iron BS1452 Gr.14	Cast Iron BS1452 Gr.14
Beitmouth	Cast Iron BS1452 Gr.14	Cast Iron BS1452 Gr.14
Rising Main Pipe	Cast Iron BS1452 Gr.14	Cast Iron BS1452 Gr.14
Discharge head - standard	Cast Iron BS1452 Gr.14	Cast Iron BS1452 Gr.14
Oil and Petroleum Industry	-	Cast Steel BS592 Gr. 8
Motor Stool	Fabricated Mild Steel	Fabricated Mild Steel
Caisson	-	Fabricated Mild Steel
Impellers - Standard	BS1400LG2-C	BS1400LG2-C
Special Suction	-	BS1400PB3-C
Impeller Wear Rings	BS1400PB3-C	BS1400PB3-C
Case Wear Rings	Bearing Bronze M&P Spec.	Bearing Bronze M&P Spec.
Shaft	Steel BS970EN8	Steel BS970EN8
Shaft Sleeves	BS1400PB3-C	BS1400PB3-C
O Ring seal - Standard	Ethylene Propylene	Ethylene Propylene
Oil and Petroleum Industry	-	Viton A

* A variety of other materials can be offered depending on application and customers' requirements

Sectional Drawing

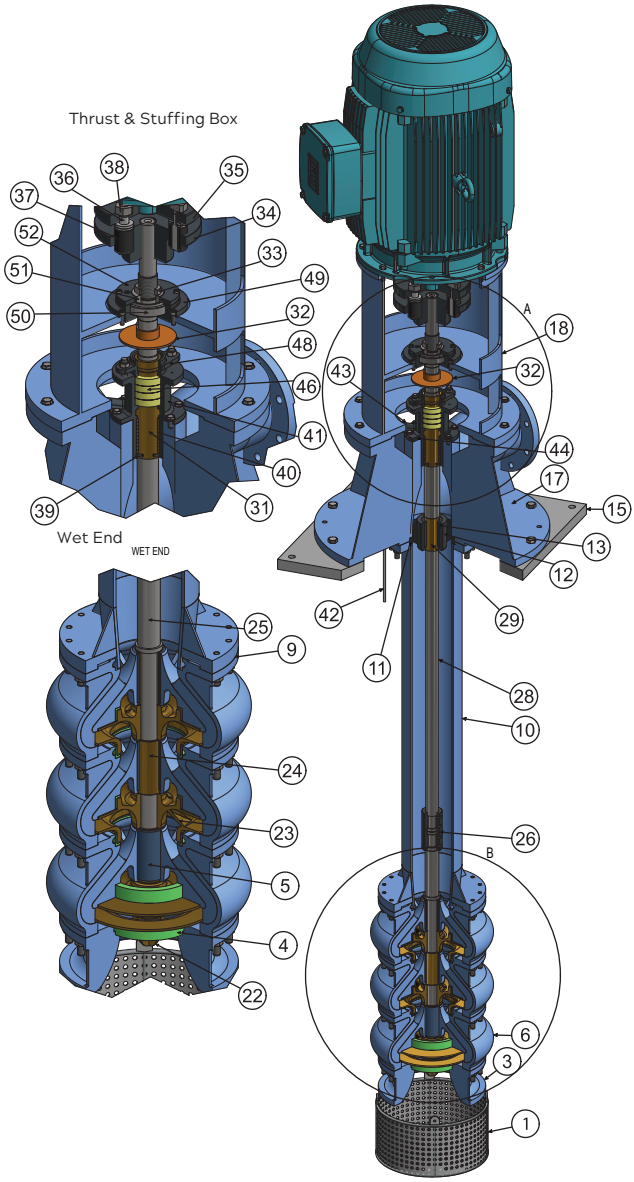

Parts List		
Item	QTY	Part
1	1	Suction Strainer
3	1	Suction Bellmouth
4	6	Diffuser Neck Rings
5	1	Plain Bearing
6	1	Diffuser
9	4	Gasket
10	1	Column
11	2	Gasket
12	1	Intermediate Bearing Housing
13	1	Intermediate Bearing
15	1	Sole Plate
17	1	Delivery Bend
18	1	Motor Stool
22	1	Impeller Locknut
23	3	Impeller
24	3	Sleeve
25	1	Pump Shaft
26	1	Muff Coupling
28	1	Head Shaft
29	1	Intermediate Bearing Sleeve
31	1	Gland Sleeve
32	1	Water Thrower
33	2	Sleeve Nut
34	1	3B Flexible Coupling - Pump Half
35	1	3B Flexible Coupling - Motor Half
36	4	3B Flexible Coupling - Pins
37	4	3B Flexible Coupling - Bushes
38	4	White Nylon Nut
39	1	Internal Circlip
40	1	Leak - Off Bush
41	1	Stuffing Box
42	1	Leak - Off Piping
43	1	Copper Connector
44	1	Gasket
46	6	Gland Packing
48	1	Split Gland
49	1	Thrust Bearing Housing
50	1	Thrust Bearing
51	1	Thrust Bearing Collar
52	1	Thrust Bearing Cover
53	1	Grease Nipple

Selection Chart CNE Pumps XF. EF. TC

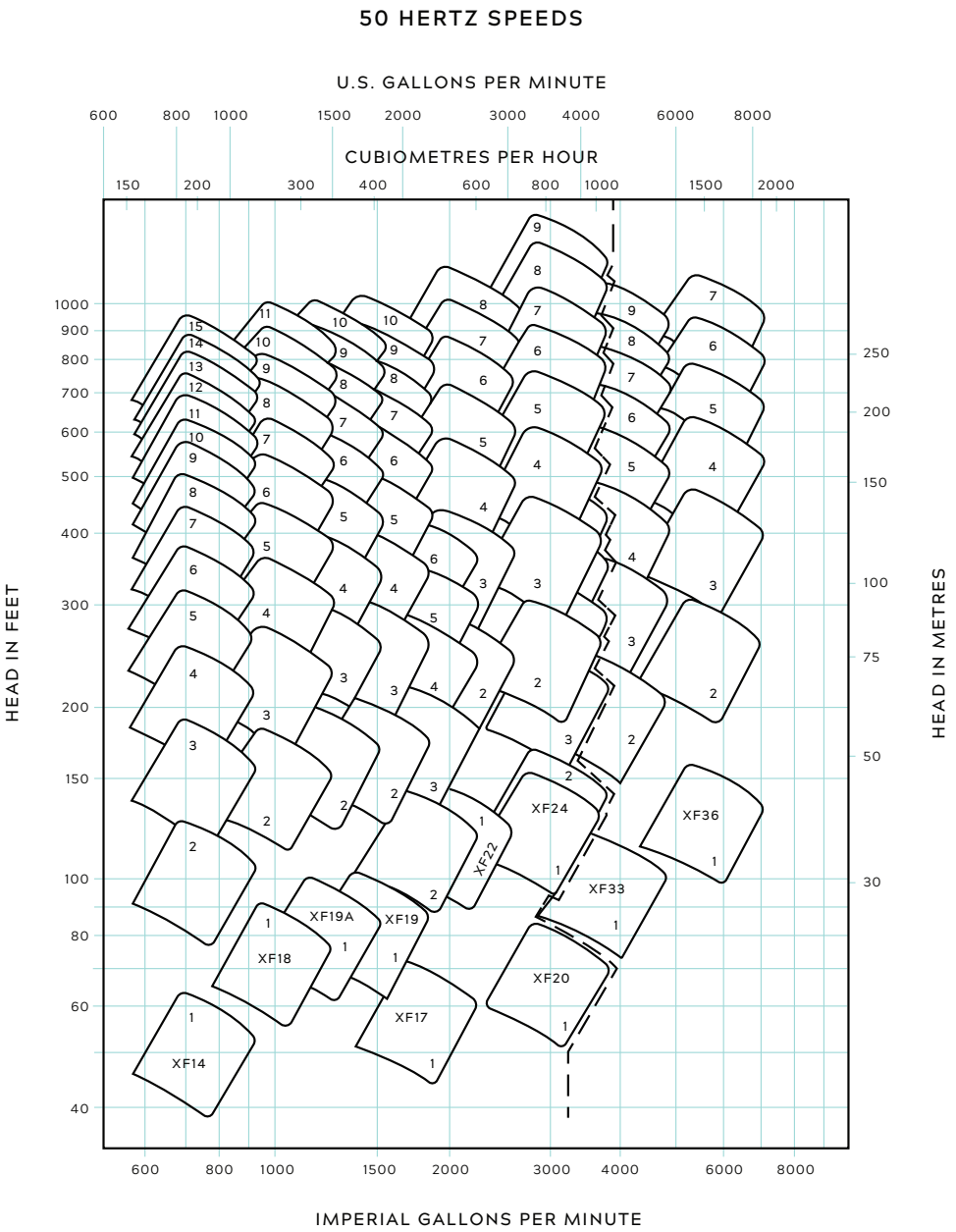

Selection Chart CNE Pumps XF. EF. TC

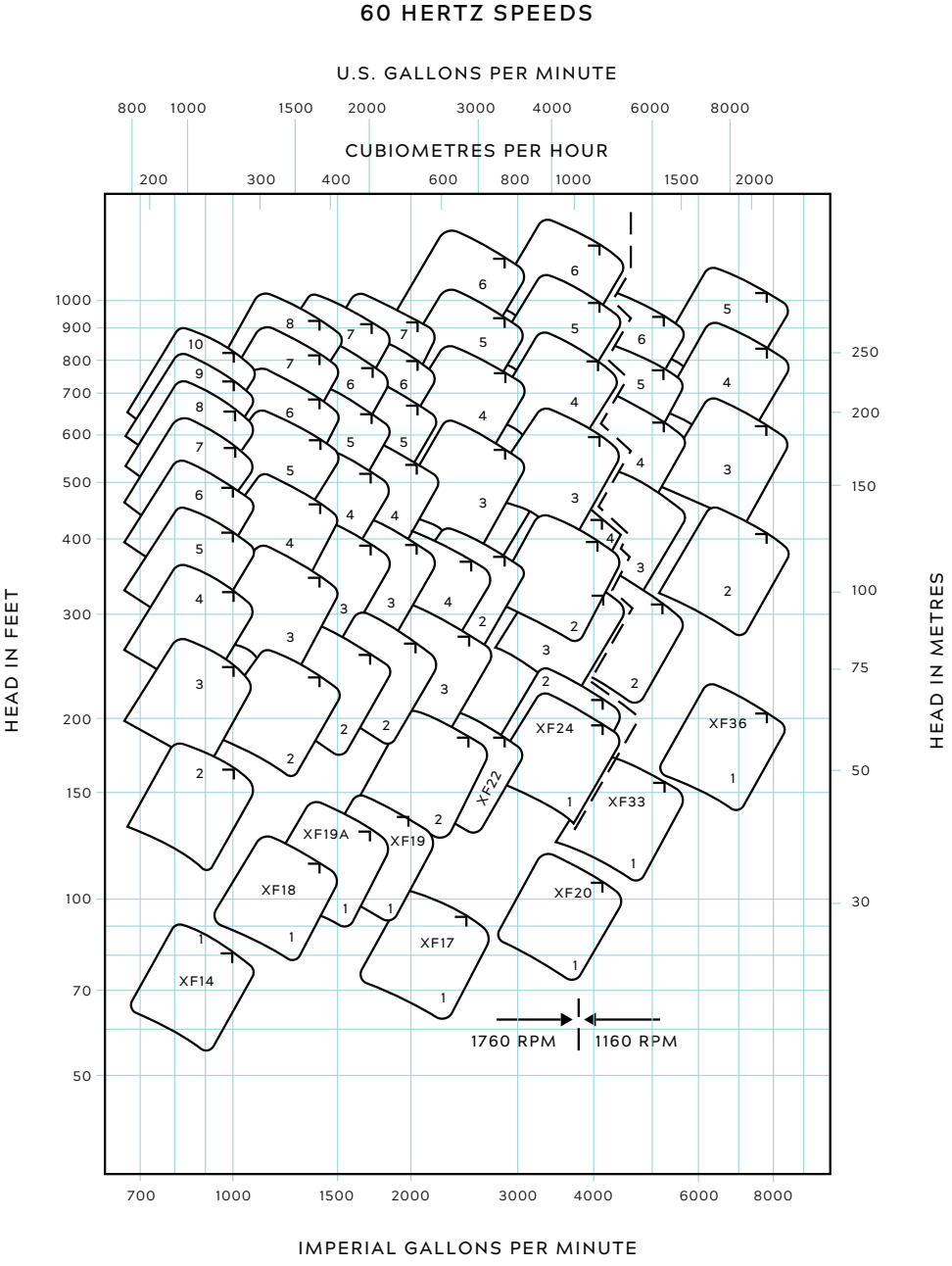

Split Casing Pumps

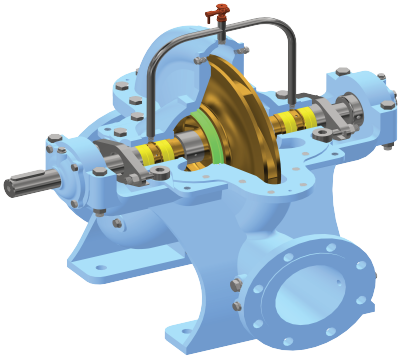

Applications

APE split case pumps are practically maintenance free, and provide years of reliable, trouble-free service. These versatile pumps are available in a wide variety of materials and drives, including electric turbines to meet your application requirements.

General liquid pumping, power plants, steel mills, chemical plants, paper mills, refineries, cooling and heating systems and water booster service are few of the applications in which our split case pumps thrive.

Features

1. Impellers are dynamically and hydraulically balanced, one-piece vacuum cast of the Francis Van design. This reduces inlet losses and accommodates high suction lifts, which reduces axial thrust loads. Single suction impellers are mounted back-to-back for hydraulic balance, and their state-of-art contoured passageways are extremely smooth, which results in high efficiency and quiet operation. Impellers are firmly keyed and locked to an accurately finished oversized shaft to absorb all shock loads.
2. The rugged, heavy duty two-piece casting is matched and split horizontally along the center line of the shaft. This allows for removal of the rotating assembly without disturbing suction and discharge piping or the driver mounting. The lower half casting includes integrally cast mounting structure and a large volute-type suction area to assure laminar entrance velocities.
3. Grease-lubricated cartridge-type bearings mounted in a rigid dust-proof housing support the rotating assembly, assuring smooth operation and extremely long bearing life.
4. Large, deep packing boxes are carefully machined into the casing and come standard with packing and split interlocking gland. Most mechanical seals are interchangeable with packing in the packing box.
5. Renewable casing and impeller wear rings are locked in place to prevent rotation. These rings are designed to minimise recirculation and maintain high efficiency over long periods.
6. High-quality heat-treated steel shafts are accurately machined along their entire length with additional grinding to an even finer tolerance at the bearing locations.
7. Easily replaceable centrifugally cast sleeves protect the shaft from packing wear, and are sealed to prevent leakage. Sleeves are accurately positioned and locked in place. Structural steel bases, designed to be filled with grout to lock the unit in place and provide mass to resist torsional movement, support the combined weight of the pump and drive.

Specifications

Casing
- Cast iron volute type designed to produce a smooth flow with gradual changes in velocity. It is along the center line, facilitating easy access to inspect or withdraw the rotating assembly without disturbing the pipe work.

Casing Wear Rings
- All pumps fitted with easily replaceable wear rings.

Impeller
- The impeller is of the shrouded double entry type, manufactured in bronze or cast iron. After machining the impeller is hand finished and statically balanced with the pump shaft to ensure smooth running of rotating parts.

Shaft
- The shaft is made of high-tensile mild steel, turned and ground depending on the application.

Shaft Sleeves
- Renewable shaft sleeves are fitted as standard to the D.E.S.C. range. Model K and KI can have these fitted as an extra.

Bearings
- Model K and KL have self-aligning ball bearings fitted. Model D.E.S.C. has heavy duty ball and roller bearings. All bearings are enclosed and grease packed in housing bolted to the pump casing.

Stuffing Box
- Stuffing boxes may be of the conventional soft packed type with adjustable glands arranged for either water or grease sealing. Alternatively, if preferred, mechanical seals can be fitted.

The materials mentioned in the specification are those supplied for pumps dealing with clean water. There is a choice of materials for different applications.

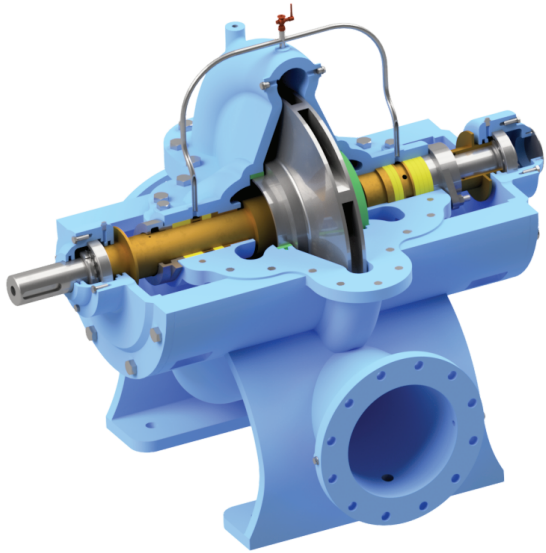

Sectional Drawing

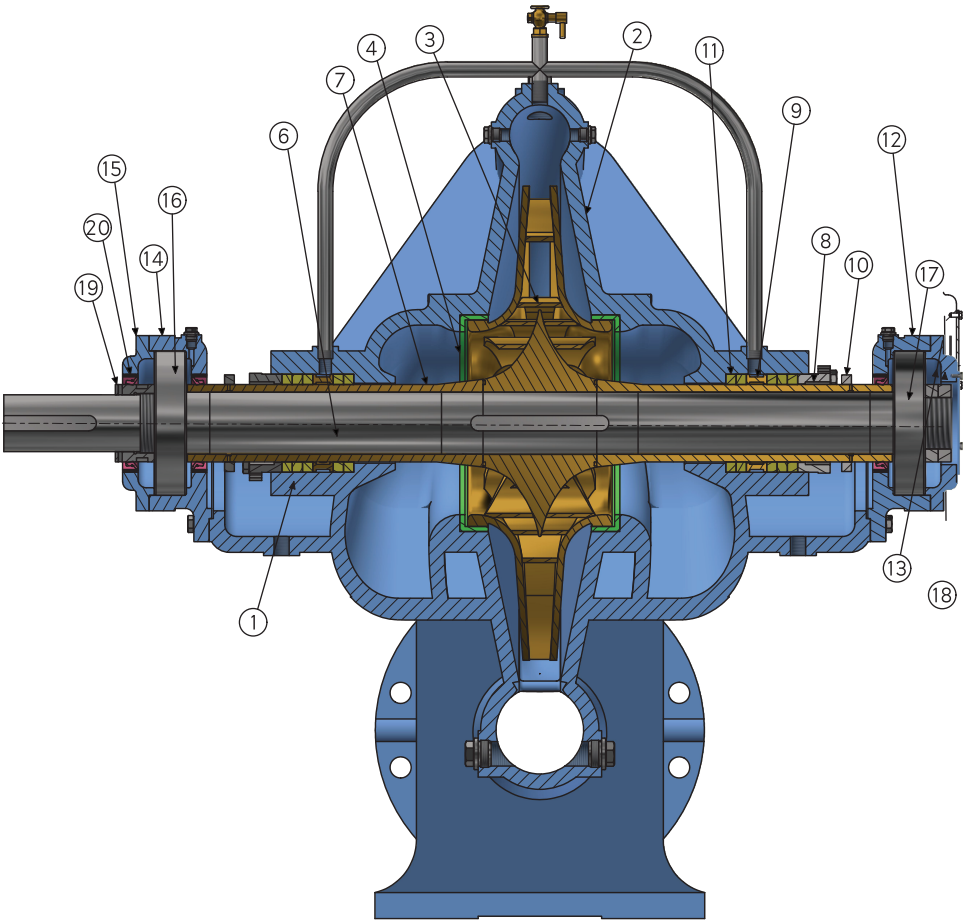

Parts List					
Item	QTY	Part	Item	QTY	Part
1	1	Bottom Casing	11	10	Gland Packing
2	1	Top Casing	12	1	Bearing Housing NDE
3	1	Impeller	13	1	Bearing Cover NDE
4	2	Wear Ring	14	1	Bearing Housing DE
5	4	Wear Ring Stop	15	1	Bearing Cover DE
6	1	Shaft	16	1	Roller Bearing
7	2	Shaft Sleeve	17	1	Ball Bearing
8	2	Gland	18	2	Shaft Nut
9	2	Lantern Ring in Halves	19	1	Bearing Nut
10	2	Water Flinger	20	3	Bearing Housing Seal

Sectional Drawing

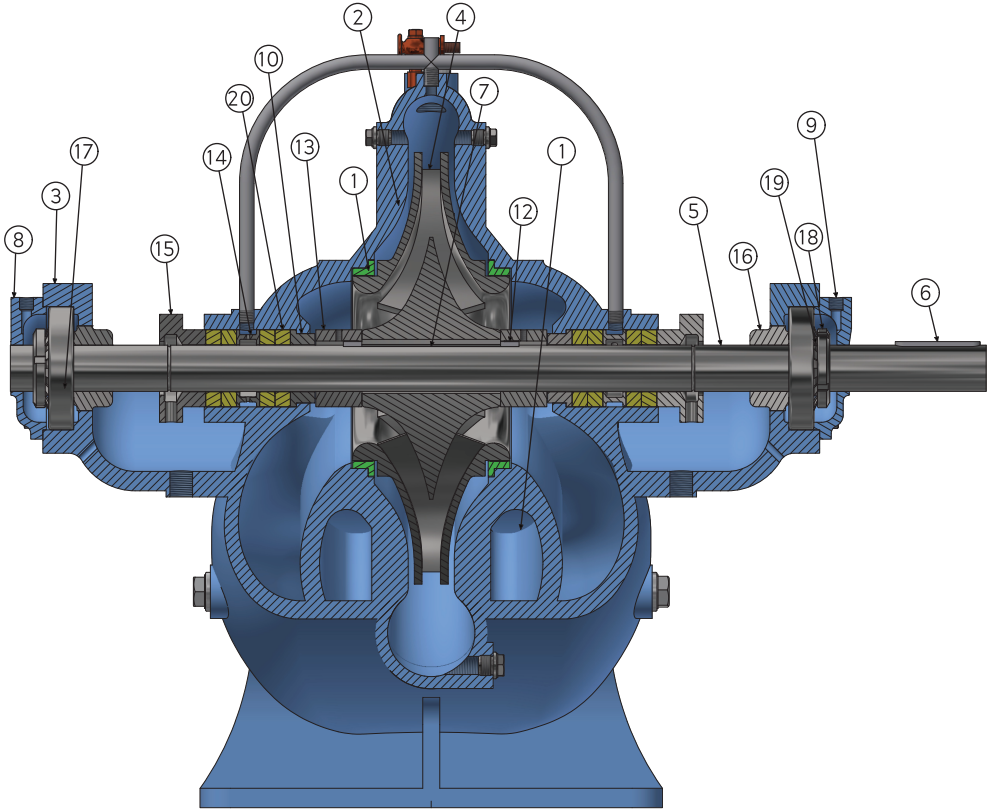

Parts List					
Item	QTY	Part	Item	QTY	Part
1	1	Bottom Half Casing	11	2	Casing Eyering
2	1	Top Half Casing	12	2	Impeller Stops
3	2	Bearing Housing Cap	13	2	Impeller Distance Collar
4	1	Impeller	14	2	Lantern Ring
5	1	Shaft	15	2	Gland
6	1	Coupling Key	16	2	Bearing Sleeve
7	1	Impeller Key	17	2	Ball Bearing
8	1	Bearing Cover NDE	18	2	Lock Nut
9	1	Bearing Cover DE	19	2	Lock Washer
10	2	Neck Ring	20	8	Gland Packing

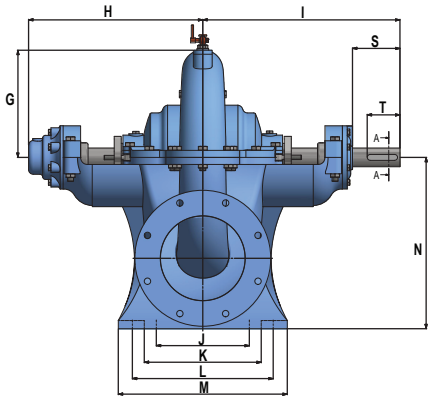

Suction View

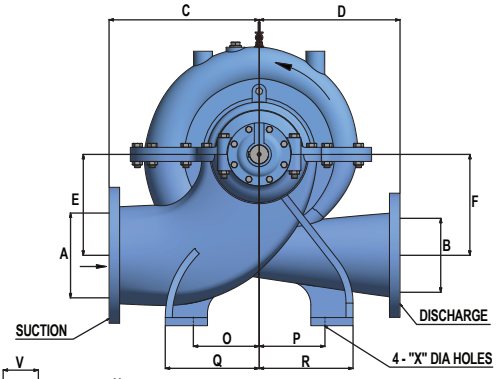

Drive Side View

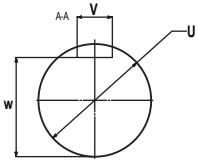

Shaft View

Models DESC, ADM, BDY, BDM

Pump Size	A	B	C	D	E	F	G	H	I	J	K	L	M	N	O	P	Q	R	S	T	U	V	W	X	WT-KG
8-10 DESC	250	200	533	533	343	343	356	518	660	508	610	508	610	559	267	268	356	356	127	114	69.8	19	62.2	25	800
10-12 ADM	300	250	457	457	260	286	324	495	616	280	356	534	610	445	240	240	279	279	127	86	50.8	15.8	51	22	730
10-12 DESC	300	250	610	610	378	378	419	518	660	305	406	380	508	610	380	380	457	457	127	114	69.8	19	62.2	25	900
12-14 BDY	350	300	559	762	352	352	419	591	737	230	305	584	660	635	330	340	406	406	108	95	69.8	15.8	57.2	22	1050
12-14 DESC	350	300	610	533	394	394	420	660	800	560	711	560	711	673	280	280	381	381	140	114	80	22	81	32	1500
14-16 BDM	400	350	610	457	356	356	432	514	673	230	305	584	660	660	318	264	394	330	124	111	63.5	15.8	55.8	27	1150
16-18 BDM	450	400	686	508	387	387	457	629	781	280	356	738	814	724	380	290	457	356	117	113	69.8	19	62	27	1350

Model K Pump

Pump Size	A	B	C	D	E	F	G	H	I	J	K	L	M	N	O	P	Q	R	S	T	U	V	W	X	MASS
2	65	50	219	194	165	165	185	292	353	-	-	216	267	254	102	102	140	140	72	52	31.75	9.5	28	19	100
2 1/2	80	65	235	210	206	206	221	292	353	-	-	216	267	305	114	114	152	152	72	52	31.75	9.5	28	19	115
3	100	80	244	206	184	184	206	300	380	-	-	241	292	298	95	95	146	146	80	64	31.75	9.5	28	18	140
4	125	100	268	254	203	203	221	331	439	-	-	254	330	337	114	114	165	165	110	76	38.1	12.7	33	18	195
5	150	125	305	305	216	216	243	347	457	-	-	305	381	362	140	140	203	203	112	75	38.1	12.7	33	22	300
6	180	150	343	343	235	235	266	368	457	-	-	330	406	394	165	165	229	229	98	76	44.45	15.875	38	22	315
8	230	200	406	381	273	273	290	471	533	-	-	381	457	464	178	178	254	254	127	92	50.8	15.875	44	22	530

Model KL Pump

Pump Size	A	B	C	D	E	F	G	H	I	J	K	L	M	N	O	P	Q	R	S	T	U	V	W	X	MASS
2	65	50	203	191	140	140	155	282	353	-	-	216	267	229	102	102	140	140	72	52	31.75	9.5	28	18	60
2 1/2	80	65	203	191	114	114	140	282	353	-	-	216	267	216	102	102	140	140	72	52	31.75	9.5	28	18	75
3	100	80	219	194	127	127	146	300	380	-	-	216	267	241	102	102	140	140	80	64	31.75	9.5	28	20	95
4	125	100	232	206	140	140	155	300	380	-	-	241	292	279	95	95	146	146	80	64	31.75	9.5	28	18	100
5	150	125	267	229	159	159	178	331	440	-	-	254	330	305	114	114	165	165	108	76	38.1	12.7	33	18	170
6	180	150	308	282	184	184	219	346	457	-	-	305	381	343	140	150	203	203	110	75	38.1	12.7	33	22	265
7	200	180	368	305	197	197	252	368	457	-	-	330	406	368	165	165	229	229	90	76	44.45	15.875	38	22	330
8	230	200	381	330	229	229	262	413	508	-	-	381	457	419	165	165	229	229	95	76	44.45	15.875	38	22	370

* Dimensions J and K do not apply to model K and KL pumps

COMPOSITE RANGE CHART
SPLIT CASING PUMPS AT 1450 RPM

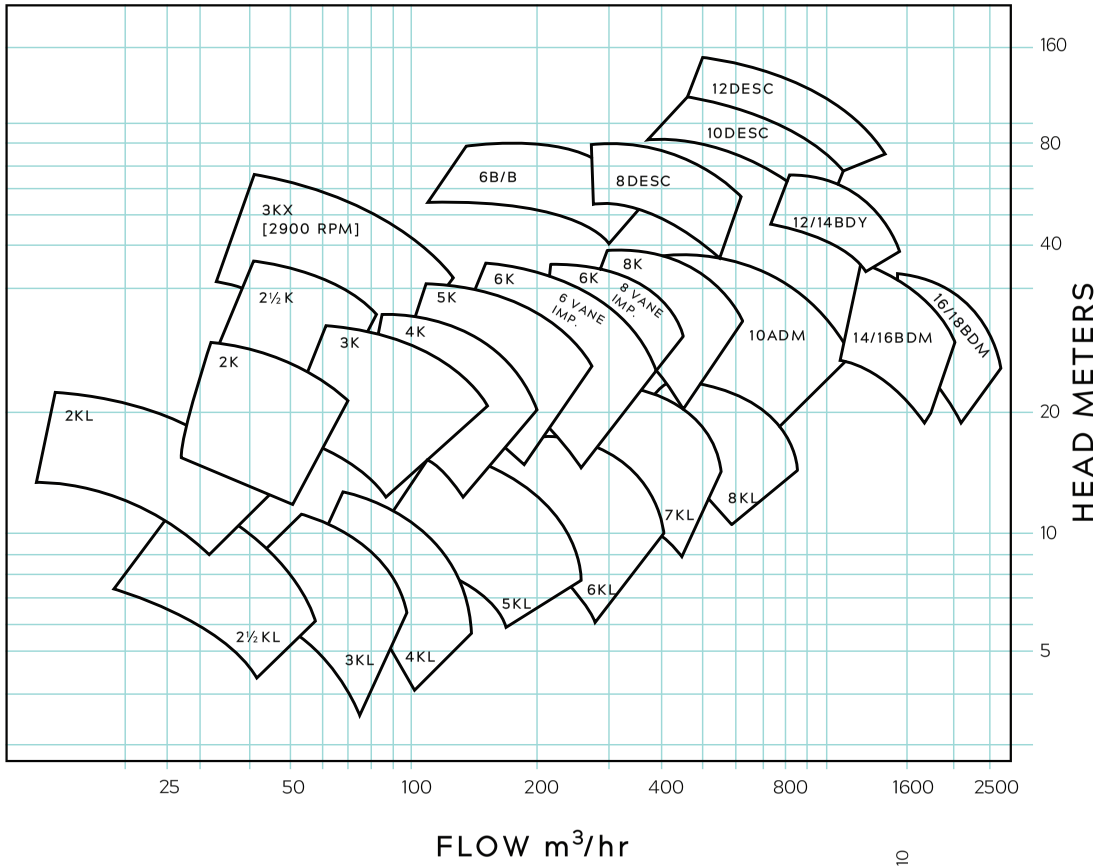

Single Stage Split Casing Pumps

General Features

The ALE to EME range of pumps form a comprehensive range of heavy duty single-stage horizontally split-casing pumps covering all capacities up to 2000 l/s and heads up to 160 meters.

The range has been designed in its standard form for all general industrial applications and optional features are readily available for special applications involving corrosion, abrasion and high temperatures which may be encountered in steelworks, chemical plant, refineries etc.

A double entry impeller is fitted to minimise axial thrust, and on larger units a double volute casing is employed to limit radial forces.

The shaft assembly complete with cartridge type bearing sub-assemblies, can be removed from the pump by removing the top half casing, without disturbing main pipework connections.

The complete range has been designed to give maximum interchangeability of wearing parts between different pump sizes and is built round only 6 shaft groups each comprising shaft sleeves and complete bearing assemblies. At the same time the impeller can be adjusted easily to give "tailor-made" performance anywhere within the range.
The pumps are suitable for direct coupled drive by electric motor, turbine or I.C. engine. Vertical operation with open or closed-type shafting can be provided.

Specification (Standard Pump)

Casing (split) - Cast Iron
Shaft, Locknut and Ring - Steel
Impeller - Bronze or Cast Iron
Neck Rings - Bearing Bronze or Cast Iron
Stuffing Box Bushes - Bearing Bronze or Cast Iron
Lantern Rings - Polyethylene
Sleeves and Nuts - Bronze or Cast Iron
Glands - Bronze
Packing - Graphited Cotton
Bearing Housing - Cast Iron
Bearing End Covers - Cast Iron
Water Throwers - Rubber
Bearings - Anti-Friction Ball (See Alternative Specifications)
Bearing Lubrication - Grease
Flange Drilling - To match BS 4504 or equivalent standard.

Alternative Specifications

The units can be supplied with one or more of the following features if so required:
- Horizontally split, bronze/white metalled sleeve bearings provided with oil ring lubrication and an anti-friction thrust unit at the pump free end.
- Mechanical seals.
- Impeller wearing rings.
- Flanges and fittings to suit preferred national or other standards e.g. A.P.I. or D.I.N.
- A wide range of alternative material selections to suit any particular special operating conditions or customer preference.
- Gland design adaptable for either internal or external sealing water service as may be required.

Sectional Drawing

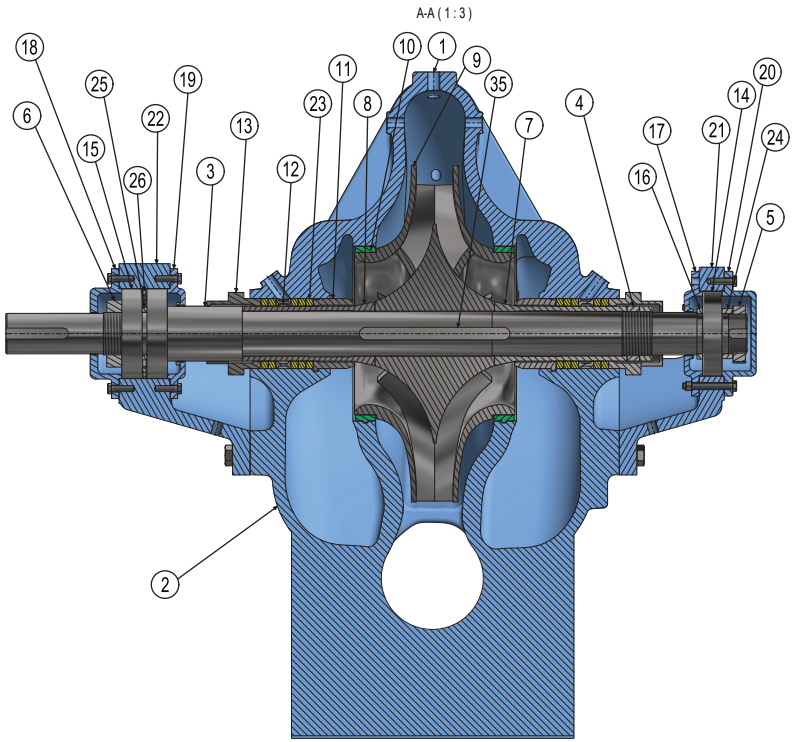

Parts List					
Item	QTY	Part	Item	QTY	Part
1	1	Top Half Casing	15	2	Thrust Bearing
2	1	Bottom Half Casing	16	1	Thrust Collar
3	1	Shaft	17	1	NDE Inner Bearing Cover
4	2	Sleeve Nut	18	1	DE Outer Bearing Cover
5	1	NDE Nut	19	1	DE Inner Bearing Cover
6	1	DE Nut	20	1	NDE Outer Bearing Cover
7	1	Sleeve - NDE	21	1	NDE Bearing Housing
8	1	SLEEVE - DE	22	1	DE Bearing Housing
9	1	Impeller	23	10	Gland Packing
10	2	Neck Ring	24	1	Spacer NDE
11	2	Stuffing Box Bush	25	1	Spacer DE
12	2	Logging Ring	26	1	Spacer DE
13	2	Gland	35	4	Muff Coupling Nut
14	1	Bearing			

Single Stage Split Casing Pumps Performance Chart

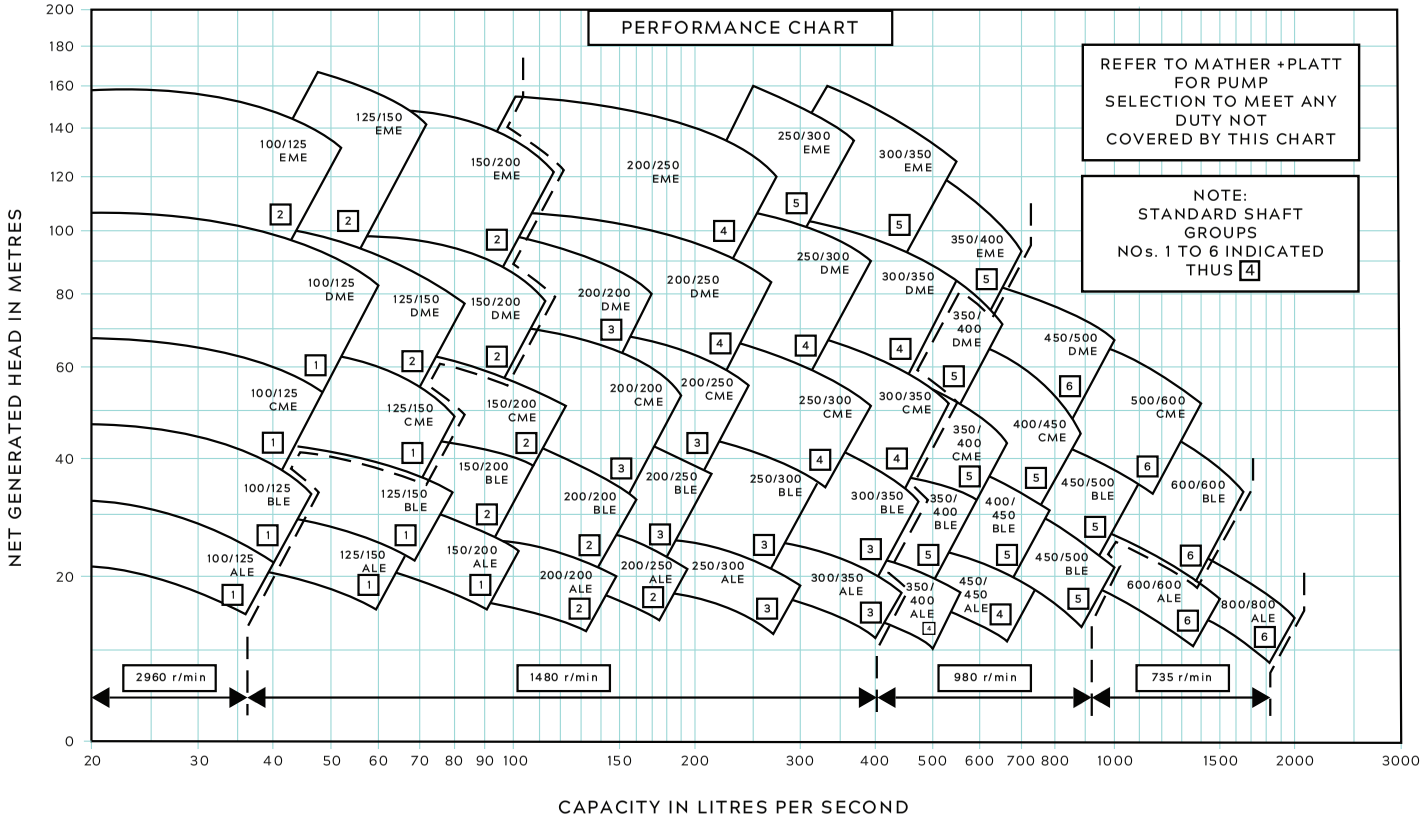

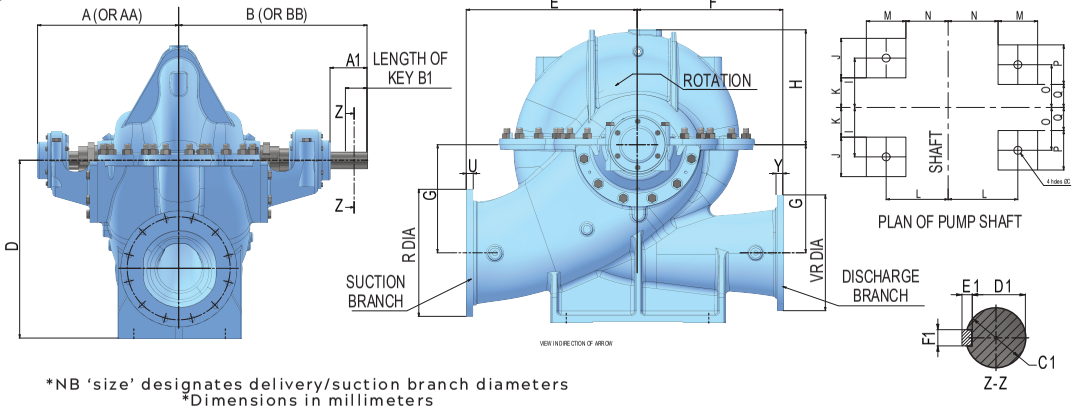

Shaft Group	Standard Shaft Extension					
	A1	B1	C1	D1	E1	F1
1	88	86	28.011 28.002	24.00 23.80	7	8
2	100	86	38.018 38.002	33.00 32.80	8	10
3	137	105	50.025 50.009	44.50 44.30	9	14
4	156	125	65.030 65.010	58.00 57.80	11	18
5	182.5	146	75.030 75.010	67.50 67.30	12	20
6	187.5	146	90.035 90.013	81.00 80.80	14	25

*NB 'size' designates delivery/suction branch diameters
*Dimensions in millimeters

Shaft Group	Type	Size	A	B	AA	BB	C	D	E	F	G	H	I	J	K	L	M	N	O	P	Q	R	S	T	U	V	W	X	Y
1	ALE	100/125	370	416	-	-	18	279	250	220	135	145	150	100	85	110	100	60	95	100	30	250	8/16	210	26	220	8/16	180	24
	BLE	100/125	370	416	-	-	18	279	250	220	140	152	150	100	85	110	100	60	95	100	30	240	8/16	210	26	220	8/16	180	24
	CME	100/125	370	416	-	-	18	254	250	230	145	170	150	100	85	110	100	60	95	100	30	250	8/16	210	26	220	8/16	180	24
	DME	100/125	370	416	-	-	18	279	280	250	170	195	150	100	85	110	100	60	95	100	30	250	8/16	210	26	220	8/16	180	24
	ALE	125/150	370	416	-	-	18	318	337	280	197	225	150	100	85	110	100	60	95	100	30	285	8/20	240	26	250	8/16	210	26
	BLE	125/150	370	416	-	-	18	318	356	318	216	255	150	100	85	110	100	60	95	100	30	285	8/20	240	26	250	8/16	210	26
	CME	125/150	370	416	-	-	18	279	305	267	162	183	150	100	85	110	100	60	95	100	30	285	8/20	240	26	250	8/16	210	26
	ALE	150/200	370	416	-	-	18	343	381	280	203	250	150	100	85	110	100	60	95	100	30	340	12/20	295	30	285	8/20	240	26
2	EME	100/125	377	440	-	-	18	266	330	280	190	225	126/50	146/80	0	125	100	90	61/59	80	0	270	8/24	220	30	235	8/20	190	28
	DME	125/150	411	474	-	-	22	318	330	280	184	210	160	100	85	110	120	50	95	100	30	285	8/20	240	26	250	8/16	210	26
	EME	125/150	381	444	-	-	18	333	302	266	226	255	125	105	65	160/120	100	110/70	100	95	50	300	8/24	250	34	270	8/24	220	30
	BLE	150/200	411	474	-	-	22	343	406	330	229	280	200	100	135	160	120	100	130	100	65	340	12/20	295	30	285	8/20	240	26
	CME	150/200	411	474	-	-	22	426	432	381	274	305	200	100	135	160	120	100	130	100	65	340	12/20	295	30	285	8/20	240	26
	DME	150/200	411	474	-	-	22	343	369	330	203	216	200	100	135	160	120	100	130	100	65	340	12/20	295	30	285	8/20	240	26
	EME	150/200	411	474	-	-	22	369	407	350	229	244	200	100	135	160	120	100	130	100	65	360	12/24	310	34	300	8/24	250	34
	ALE	200/200	411	474	-	-	22	343	407	317	227	270	200	100	135	160	120	100	152	100	87	340	12/20	295	30	340	12/20	295	30
	BLE	200/200	411	474	-	-	22	426	407	375	248	290	200	100	135	160	120	100	152	100	87	340	12/20	295	30	340	12/20	295	30
	ALE	200/250	411	474	-	-	22	426	432	318	248	290	200	100	135	160	120	100	152	100	87	395	12/20	350	28	340	8/20	295	26

Shaft Group	Type	Size	A	B	AA	BB	C	D	E	F	G	H	I	J	K	L	M	N	O	P	Q	R	T	U	V	W	X	Y	Z
3	CME	200/200	525	612	608	696	26	426	483	432	292	336	200	120	115	160	135	92.5	152	114	73	340	12/20	295	30	340	8/20	295	30
	DME	200/200	525	612	608	696	22	464	470	457	343	370	200	120	115	160	135	92.5	152	114	73	340	12/20	295	30	340	8/20	295	30
	BLE	200/250	525	612	608	696	26	464	483	381	292	315	200	120	115	160	135	92.5	152	114	73	504	12/24	355	32	340	8/20	295	30
	CME	200/250	525	612	608	696	26	464	483	457	299	350	200	120	115	160	135	92.5	152	114	73	395	12/20	350	28	340	8/20	295	26
	ALE	250/300	525	612	608	696	26	464	508	337	273	330	250	120	165	160	135	92.5	152	114	73	460	12/24	410	32	405	12/24	355	32
	BLE	250/300	525	612	608	696	26	546	533	432	317	360	250	120	165	160	135	92.5	152	114	73	460	12/24	410	32	405	12/24	355	32
	ALE	300/350	525	612	608	696	24	546	565	390	318	371	260	120	165	160	135	92.5	152	114	73	520	16/24	470	36	460	12/24	410	32
	BLE	300/350	525	612	608	696	22	546	559	391	318	375	260	120	165	160	135	92.5	152	114	73	505	16/20	460	30	445	12/20	400	28
4	DME	200/250	594	693	677	800	26	546	521	458	356	395	275	150	175	230	150	155	200	150	100	405	12/24	355	32	340	12/20	295	30
	EME	200/250	594	693	677	800	26	680	682	500	435	449	275	150	175	230	150	155	200	150	100	425	12/27	370	36	360	12/24	310	34
	CME	250/300	594	693	677	800	26	546	534	457	343	380	275	150	175	230	150	155	200	150	100	460	12/24	410	32	405	12/24	355	32
	DME	250/300	594	693	677	800	26	546	584	492	356	415	275	150	175	230	150	155	200	150	100	460	12/24	410	32	405	12/24	355	32
	CME	300/350	594	693	677	800	26	591	584	483	343	405	300	150	200	230	150	155	250	150	150	520	16/24	470	36	460	12/24	410	32
	DME	300/350	594	693	677	800	26	591	629	534	378	440	300	150	200	230	150	155	250	150	150	520	16/24	470	36	460	12/24	410	32
	ALE	350/400	594	693	677	800	26	686	698	464	407	460	380	150	280	230	200	130	320	150	120	565	16/24	515	32	505	16/20	460	30
5	EME	250/300	643	764.5	721	917	26	622	635	559	407	476	270	120	200	270	180	180	170	120	100	485	16/27	430	40	425	12/27	370	36
	EME	300/350	673	794.5	751	887	30	686	660	610	445	476	380	150	280	300	200	200	220	150	120	555	16/30	490	44	485	9/16	430	40
	BLE	350/400	703	824.5	781	917	26	686	737	559	445	500	380	150	280	300	200	200	220	150	120	565	16/24	515	32	505	16/20	460	30
	CME	350/400	703	824.5	781	917	26	686	762	619	457	520	380	150	280	300	200	200	220	150	120	565	16/24	515	32	505	16/20	460	30
	DME	350/400	703	824.5	781	917	26	762	813	711	495	600	380	150	280	300	200	200	220	150	120	565	16/24	515	32	505	16/20	460	30
	EME	350/400	703	824.5	781	917	35	762	848	580	512	565	355	200	205	500/300	200	400/200	195	150	95	620	16/33	550	48	555	16/30	490	44
	ALE	450/450	703	824.5	781	917	26	762	762	578	457	510	380	150	280	300	200	200	220	150	120	640	20/27	585	40	640	20/27	585	40
	BLE	400/450	703	824.5	781	917	26	762	762	565	470	520	380	150	280	300	200	200	220	150	120	640	20/27	585	40	580	16/27	525	38
	CME	400/450	703	824.5	781	917	26	800	864	762	521	580	380	150	280	400	200	200	220	150	120	640	20/27	585	40	580	16/27	525	30
	BLE	450/500	703	824.6	781	917	26	800	838	584	495	570	450	150	350	300	200	200	220	150	120	715	20/30	650	42	640	20/27	585	40
	CME	450/500	703	824.5	781	917	32	800	864	610	518	560	450	150	350	300	200	200	220	150	120	715	20/30	650	42	640	20/27	585	40
6	DME	450/500	812	952.2	915	1042	32	889	915	762	572	630	432	165	330	407	203	305	305	165	203	715	20/30	650	42	640	20/27	585	40
	CME	500/600	812	952.2	915	1042	33	940	1067	745	560	596	550	205	400	400	230	285	373	205	225	840	20/33	770	48	715	20/30	650	42
	ALE	600/600	892	1010.5	995	1122	33	940	915	610	559	660	576	200	440	300	200	200	416	200	280	840	20/33	770	48	840	20/33	770	48
	CME	600/600	892	1010.5	995	1122	33	940	915	610	559	660	576	200	440	300	200	200	416	200	280	840	20/33	770	48	840	20/33	770	48
	ALE	800/800	892	1010.5	995	1122	33	1160	1143	762	651	685	550	225	400	400	230	285	373	205	225	1025	24/36	950	58	1025	24/36	950	58

Two Stage Split Casing Pumps

General Features

The G.M.E. range of pumps forms a comprehensive selection of heavy duty two stage horizontally spilt-casing units covering all capacities up to 500 l/s and heads up to 250 metres.The range has been designed in its standard form for all general industrial applications and optional features are readily available for special duties involving corrosion, abrasion and high temperatures such as may be encountered in steelworks, chemical plants, refineries, etc.

Two single entry impellers are fitted in a back to back arrangement to minimise axial thrust and the casing in provided with a crossover bend to transfer the liquid being pumped from the first stage to the second stage.

The shaft assembly complete with cartridge type bearing sub-assemblies can be removed from the pump by removing the top half casing without disturbing main pipework connections.

The complete range has been designed to give maximum interchangeability of wearing parts between different pump sizes and is built round only 5 shaft groups each comprising shaft, sleeves, complete internal bushings and external bearing assemblies. At the same time the impellers can be adjusted easily to give “tailor made” performance anywhere within the range. The pumps are suitable for direct coupled drive by electric motor or other forms of prime mover. Vertical operation in either a close coupled arrangement or with extended vertical drive shafting can be provided to suit the application.

Specification (Standard Pump)

Casing (Split) - Cast Iron
Shaft, Locknut and Ring - Steel
Impellers - Bronze
Neck Rings - Bearing Bronze
Inter Stage Collar - Stainless Steel, Ceramic Coated
Inter Stage Bush - Stainless Steel, Ceramic Coated
Stuffing Box Bush - Bearing Bronze
Breakdown Bush - Bearing Bronze
Lantern Ring - Polyethylene
Sleeves and nuts - Bronze
Glands - Bronze
Packing - Graphited Cotton
Bearing Housing - Cast Iron
Bearing End Covers - Cast Iron
Water Throwers - Rubber
Bearings - Anti Friction Ball (See alternative specifications)
Bearing Lubrication - Grease
Flange Drilling - To match B.S. 4504 or equivalent standard.

Alternative Specifications

The units can be supplied with one or more of the following features if so required.

- Horizontally split, bronze/white metalled sleeve bearings provided with oil ring lubrication and either an anti-friction ball or tilting pad double thrust unit at the pump free end.
- Mechanical Seals.
- Impeller wearing rings.
- Flanges and fitting to suit preferred national or other standards e.g. A.P.I. OR D.I.N.
- A wide range of alternative material selections to suit any particular special operating conditions or customer preference.
- Gland design adaptable for either internal or external sealing water service as may be required.

Sectional Drawing

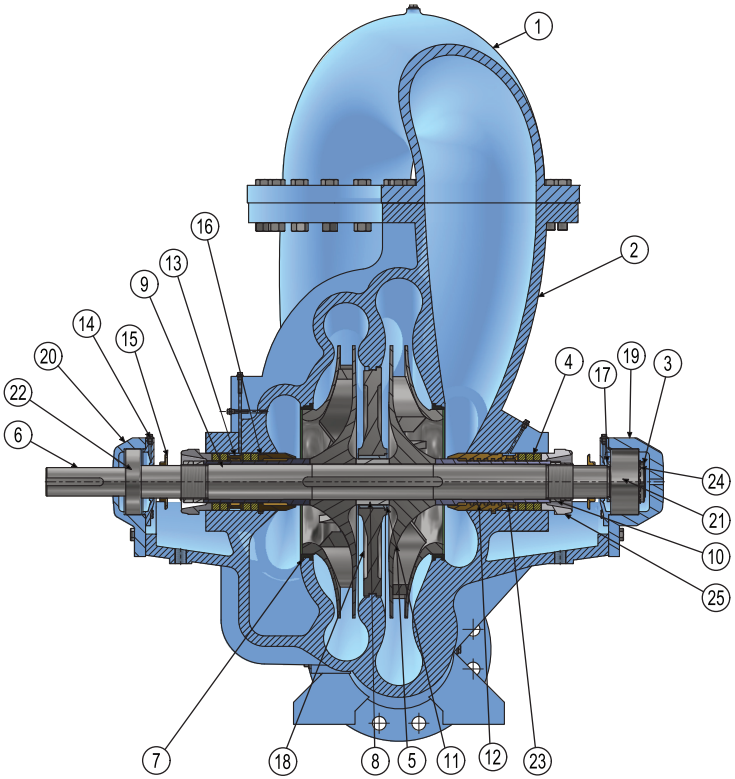

Parts List					
Item	QTY	Part	Item	QTY	Part
1	1	Crossover Bend	14	2	Bearing End Covers
2	1	Casing	15	2	Deflector
3	1	Lock Nut	16	1	Stuffing Box Bush
4	7	Gland Packing	17	1	Thrust Collar
5	2	Impeller	18	1	Interstage Ring
6	1	Shaft	19	1	Bearing Housing NDE
7	1	Casing Ring	20	1	Bearing Housing DE
8	1	Interstage Sleeve	21	1	Angular Contact Ball Bearing
9	1	Sleeve DE	22	1	Deep Groove Ball Bearing
10	4	Shaft Nut	23	1	Sleeve NDE
11	1	Interstage Bush	24	1	Locking Washer
12	1	Breakdown Bush	25	2	Split Gland
13	1	Lantern Ring			

Two Stage Split Casing Pumps Performance Chart

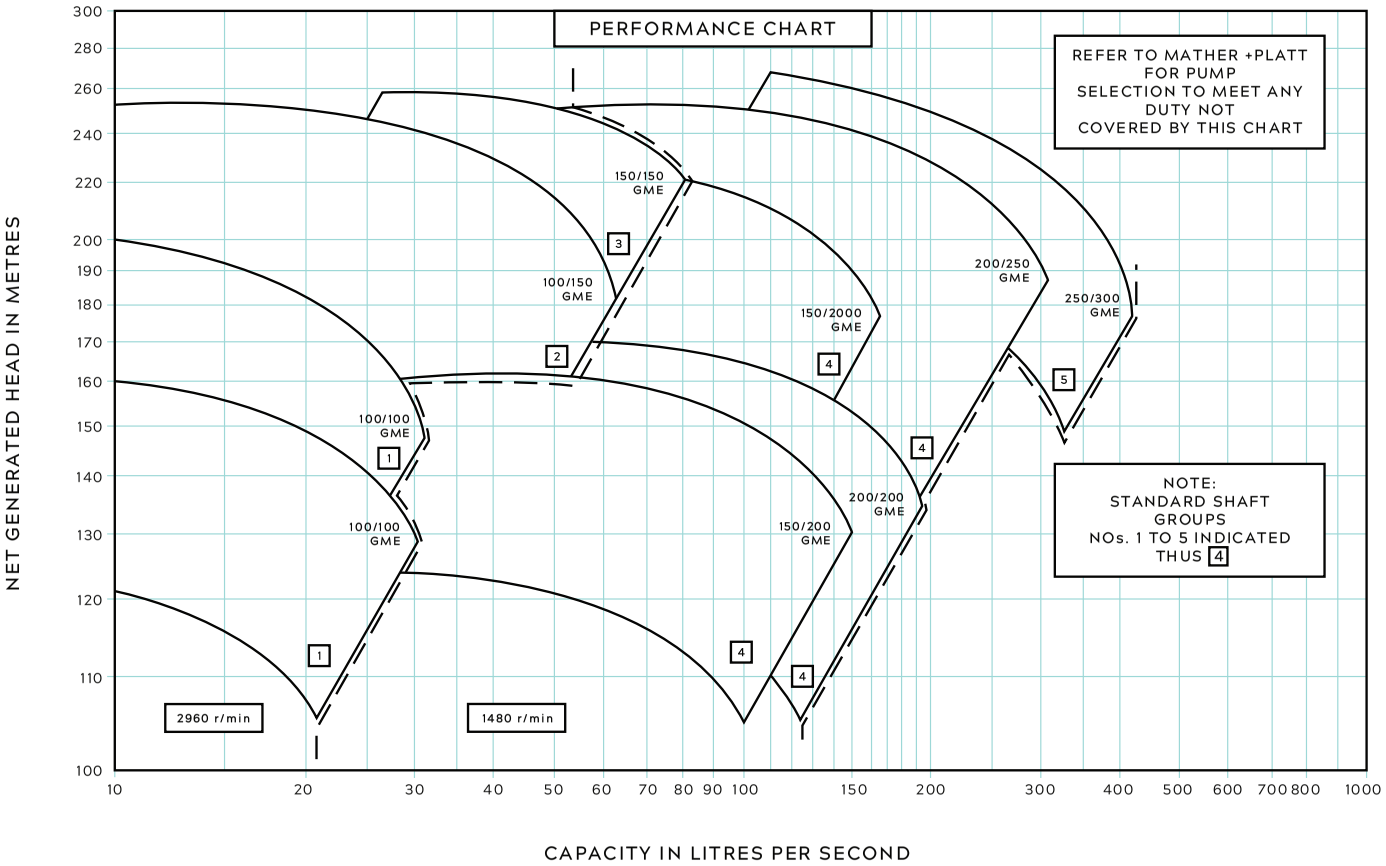

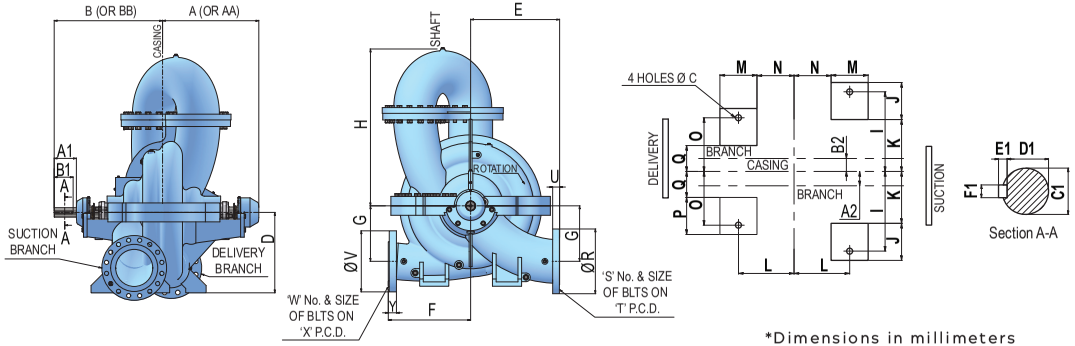

*Dimensions in millimeters

Shaft Group	Standard Shaft Extension					
	A1	B1	C1	D1	E1	F1
1	88	86	28.011 28.002	24.00 23.80	7	8
2	100	86	38.018 38.002	33.00 32.80	8	10
3	137	105	50.025 50.009	44.50 44.30	9	14
4	156	125	65.030 65.010	58.00 57.80	11	18
5	182.5	146	75.030 75.010	67.50 67.30	12	20

Mather and Platt

Two Stage Split Casing Pumps

Shaft Group	Type	Size	A	B	AA	BB	C	D	E	F	G	H	I	J	K	L	M	N	O	P	Q
1	GME	100/100	370	416	-	-	18	300	267	254	178	355	140	100	80	110	100	60	110	100	50
	GME	100/1000	370	416	-	-	18	300	267	254	178	355	140	100	80	110	100	60	110	100	50
2	GME	100/150	411	474	-	-	18	360	360	320	200	390	200	100	140	180	100	130	120	100	60
3	GME	150/150	512	599	595	680	26	370	360	365	200	400	230	120	160	190	120	130	170	120	100
4	GME	150/200	594	693	677	793	22	495	508	444.5	279/305	828	340	150	250	245	150	170	220	150	130
	GME	150/2000	664	743	747	843	26	520	508	444.5	343	848	340	150	250	245	150	170	220	150	130
	GME	200/200	684	743	767	843	22	525	534	490	330	960	340	150	250	245	150	170	220	50	130
	GME	200/250	664	743	747	843	26	600	610	560	381	1077	340	150	250	245	150	170	220	120	130
5	GME	250/300	757	836.5	835	926.5	33	830	762	584	578	1212	430	200	280	300	200	200	290	200	140

Shaft Group	Type	Size	Suction Branch Nominal Bore	Delivery Branch Nominal Bore	A2	B2	R	S	T	U	V	W	X	Y
1	GME	100/100	100	100	59	27	235	8/20	190	28	235	8/20	190	28
	GME	100/1000	100	100	59	27	235	8/20	190	28	235	8/20	190	28
2	GME	100/150	150	100	108	33	300	8/24	250	34	235	8/20	190	28
3	GME	150/150	150	150	115	40	300	8/24	250	34	300	8/24	250	34
4	GME	150/200	250	200	194	54	425	12/27	370	36	360	12/24	310	34
	GME	150/2000	200	150	177	49	360	12/24	310	34	300	8/24	250	34
	GME	200/200	200	200	187	60	360	12/24	310	34	360	12/24	310	34
	GME	200/250	250	200	194	60	425	12/27	370	36	360	12/24	310	34
5	GME	250/300	300	250	77	70	425	16/27	430	40	425	12/27	370	36

End Suction Pumps

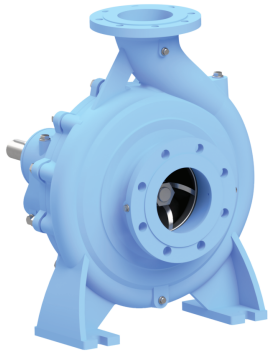

Features

Pumps based on DIN. 24255 dimensions. Back pull-out design to facilitate maintenance and no disturbance of pipe work when fitted with spacer coupling.

Pedestal mounted bearing housing available for belt drives and allows angled or horizontal positioning of delivery branch.

Series 1 - Pumps available with grease or oil lubricated bearings.

Specifications

Casing
High efficiency volute type with flanges to BS. 4504. Casting wear rings are fitted as standard on all Series 3 pumps. Series 1 and 2 are available as an optional extra.

Impeller
Double shrouded overhung impeller, hydraulically balanced, keyed to the shaft.

Shaft Steal
Standard arrangement for pumps is gland packing with mechanical seals available as an alternative.

Material of Construction
Pump Casting - Cast Iron
Bearing Housing - Cast Iron
Impeller - Cast Iron or Bronze
Shaft - Steel
Wear Rings - Cast Iron or Bronze

Alternative material combinations are available.
Temperature Limits
104°C - Pumps with soft packed glands.
140°C - Pumps with mechanical seals.

Reduce working pressures shown on dimension sheet by 2 bars when operating above 105°C.

Direction of Rotation
Clockwise when looking at shaft end.

Application

Volute casing centrifugal pump, end suction type, main dimensions and performance according to DIN 24255 standards with complementary sizes to extend performance range. For duties of approx. 4000 m^3/hr flanges DN 500/500 are required. Up to a duty of approx. 500m^3/hr (pump flanges DN 200/150) the pumps are also available in space-saving block design type “APEbloc”.

APE pumps are designed to handle media:
- Which are clean or slightly abrasive
- Having temperatures up to 140°C
- With viscosities not exceeding 150mm^2/s (cSt)
- Which can easily be pumped

Special materials upon request. All pumps available for 50/60 Hz.

End Suction Pumps Performance Chart

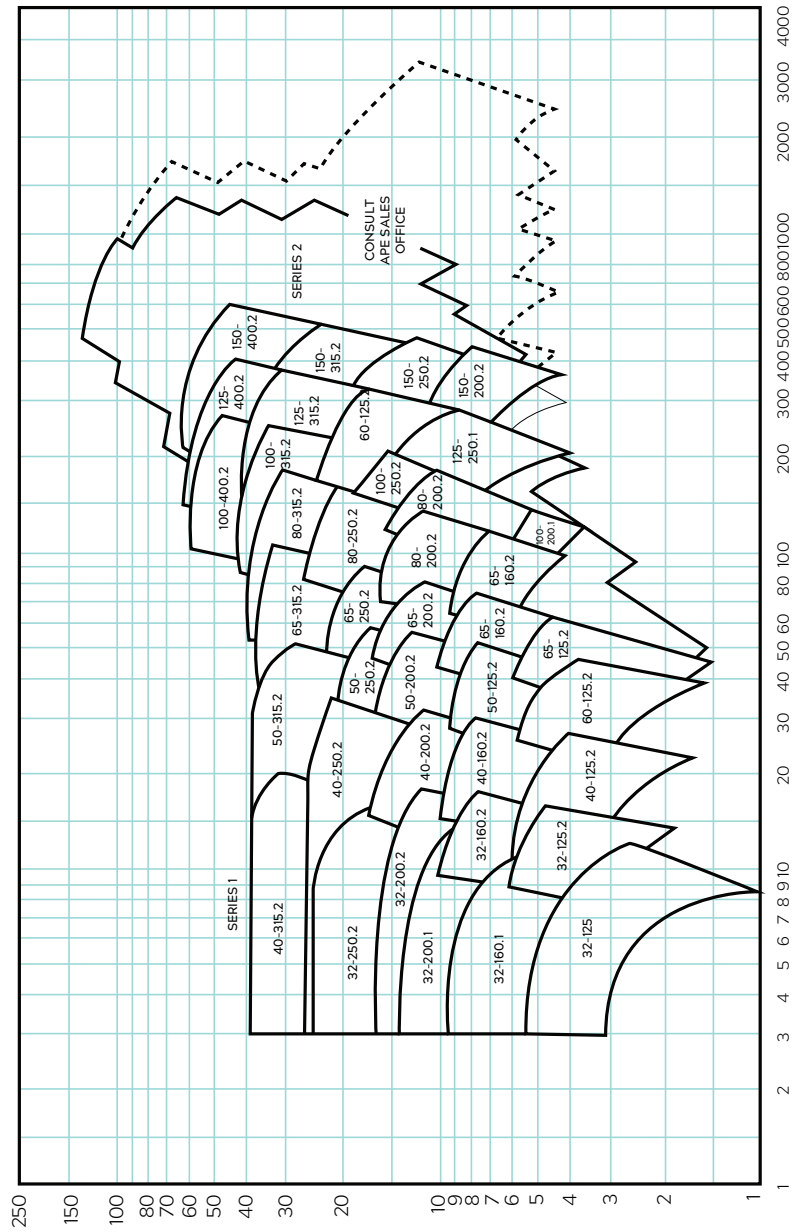

End Suction Pumps Performance Chart

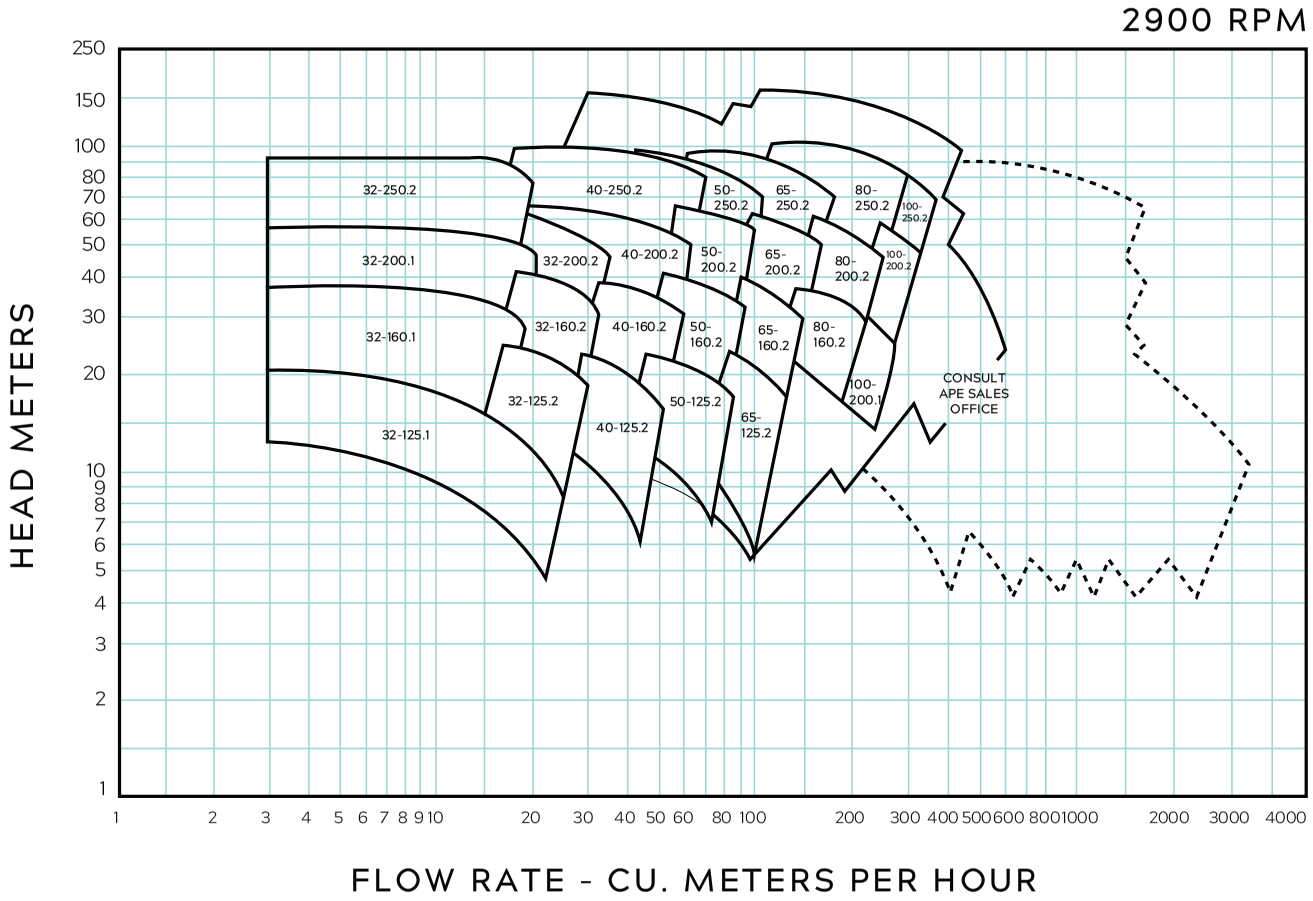

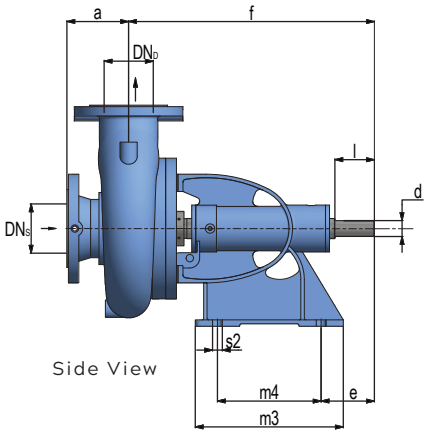

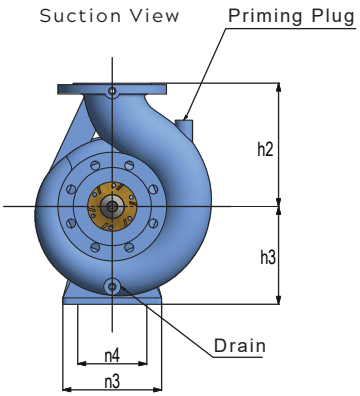

Series 1

Type	DN_S	DN_D	a	f	h_1	h_2	h_3	b	e	m_1	m_2	m_3	m_4	n_1	n_2	n_3	n_4	s_1	s_2	w	x	d	l	kg
32-160	50	32	80	360	132	160	160	50	80	100	70	180	130	240	190	125	100	M12	M12	-	80	24	50	30
32-200	50	32	80	360	160	180	160	50	80	100	70	230	160	240	190	160	125	M12	M14	-	80	24	50	34
32-250	50	32	100	360	180	225	160	65	80	125	70	230	160	320	250	160	125	M12	M14	-	80	24	50	47
40-160	65	40	80	360	132	160	160	50	80	100	70	180	130	240	190	125	100	M12	M12	-	80	24	50	31
40-200	65	40	100	360	160	180	160	50	80	100	70	230	160	265	212	160	125	M12	M14	-	80	24	50	35
40-250	65	40	100	360	180	225	160	65	80	125	70	230	160	320	250	160	125	M12	M14	-	80	24	50	47
40-315	65	40	125	470	225	250	200	65	110	125	95	300	210	345	280	200	160	M12	M16	-	80	32	80	82
50-160	65	50	100	360	160	180	160	50	80	100	70	180	130	265	212	125	100	M12	M12	-	80	24	50	33
50-200	65	50	100	360	160	200	160	50	80	100	70	230	160	265	212	160	125	M12	M14	-	80	24	50	39
50-250	65	50	100	360	180	225	160	65	80	125	70	230	160	320	250	160	125	M12	M14	-	80	24	50	49
50-315	65	50	125	470	225	280	200	65	110	125	95	300	210	345	280	200	160	M12	M16	-	80	32	80	83
65-125	80	65	100	360	160	180	160	65	80	125	95	180	130	280	212	125	100	M12	M12	-	80	24	50	34
65-160	80	65	100	360	160	200	160	65	80	125	95	230	160	280	212	160	125	M12	M14	-	80	24	50	39
65-200	80	65	100	360	180	225	160	65	80	125	95	230	160	320	250	160	125	M12	M14	-	80	24	50	43
65-250	80	65	100	470	200	250	200	80	110	160	95	300	210	360	280	200	160	M16	M16	-	80	32	80	72
65-315	80	65	125	470	225	280	200	80	110	160	120	300	210	400	315	200	160	M16	M16	-	100	32	80	84
80-160	100	80	125	360	180	225	160	65	80	125	120	230	160	320	250	160	125	M12	M14	-	100	24	50	43
80-200	100	80	125	470	180	250	200	65	110	125	95	300	210	345	280	200	160	M12	M16	-	100	32	80	63
80-250	100	80	125	470	200	280	200	80	110	160	95	300	210	400	315	200	160	M16	M16	-	100	32	80	78
80-315	100	80	125	470	250	315	200	80	110	160	120	300	210	400	315	200	160	M16	M16	-	100	32	80	95
100-200	125	100	125	470	200	280	200	80	110	160	120	300	210	360	280	200	160	M16	M16	-	120	32	80	71
100-250	125	100	140	470	225	280	200	80	110	160	120	300	210	400	315	200	160	M16	M16	-	120	32	80	86
100-315	125	100	140	470	250	315	200	80	110	160	120	300	210	400	315	200	160	M16	M16	-	120	32	80	100
100-400	125	100	140	530	280	355	250	100	110	100	120	350	250	500	400	250	200	M20	M16	-	120	42	110	151
125-250	150	125	140	470	250	355	200	80	110	100	150	300	210	400	315	200	160	M16	M16	-	140	32	80	99
125-315	150	125	140	530	280	355	250	100	110	160	120	350	250	500	400	250	200	M20	M16	-	140	42	110	152
125-400	150	125	140	530	315	400	250	100	110	200	150	350	250	500	400	250	200	M20	M16	-	140	42	110	160
150-200	200	150	160	470	280	370	200	100	110	200	150	300	210	550	450	200	160	M20	M16	-	140	32	80	126
150-250	200	150	160	475	280	400	200	100	110	200	150	300	210	550	450	200	160	M20	M16	-	140	32	80	152
150-315	200	150	160	530	280	400	250	100	110	200	150	350	250	550	450	250	200	M20	M16	-	140	42	110	160
150-400	200	150	160	530	315	450	250	100	110	200	150	350	250	550	450	250	200	M20	M16	-	140	42	110	175

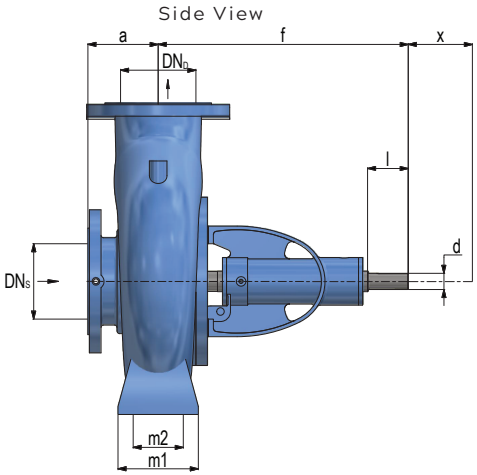

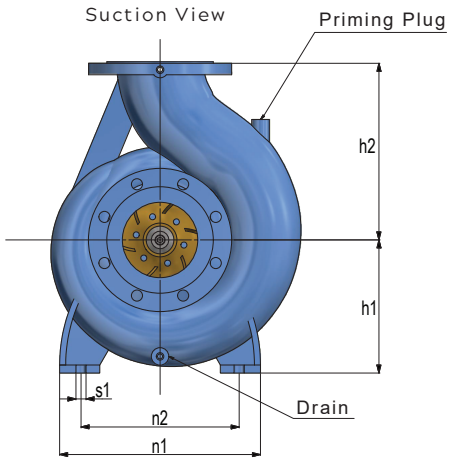

Series 2

Type	DNS	DND	a	f	h1	h2	h3	b	e	m1	m2	m3	m4	n1	n2	n3	n4	s1	s2	w	x	d	l	kg
80-50-250	80	50	125	500	180	225	-	65	-	125	95	-	-	320	250	-	-	M12	-	-	140	32	80	112
80-50-315	80	50	125	500	225	280	-	65	-	125	95	-	-	345	250	-	-	M12	-	-	140	32	80	85
100-65-315	100	65	125	530	225	280	-	80	-	160	120	-	-	400	280	-	-	M16	-	-	140	42	110	95
100-100-125	100	100	125	500	200	250	-	65	-	125	95	-	-	320	315	-	-	M12	-	-	140	32	80	126
125-100-200	125	100	125	500	200	280	-	80	-	160	120	-	-	360	250	-	-	M16	-	-	140	32	80	159
125-100-250	125	100	140	500	225	280	-	80	-	160	120	-	-	400	280	-	-	M16	-	-	140	32	80	170
125-100-315	125	100	140	530	250	315	-	80	-	160	120	-	-	400	315	-	-	M16	-	-	140	42	110	208
125-100-400	125	100	140	530	280	355	-	100	-	200	150	-	-	500	315	-	-	M20	-	-	140	42	110	151
125-125-160	125	125	125	500	225	315	-	80	-	160	120	-	-	360	400	-	-	M16	-	-	140	32	80	159
150-125-400	150	125	140	530	315	400	-	100	-	200	150	-	-	500	280	-	-	M20	-	-	140	32	80	271
150-150-200	150	150	140	500	265	355	-	80	-	160	120	-	-	400	400	-	-	M16	-	-	140	32	80	131
200-150-315	200	150	160	530	280	400	-	100	-	200	150	-	-	550	315	-	-	M20	-	-	180	42	110	273
200-150-400	200	150	160	530	315	450	-	100	-	200	150	-	-	550	450	-	-	M20	-	-	180	42	110	296
200-150-460	200	150	160	530	335	450	-	100	-	200	150	-	-	550	450	-	-	M20	-	-	180	42	110	330
200-200-310	200	200	160	500	335	450	-	100	-	200	150	-	-	500	450	-	-	M20	-	-	180	32	80	192
200-200-350	200	200	160	530	335	450	-	100	-	200	150	-	-	550	400	-	-	M20	-	-	180	42	110	193
200-200-430	200	200	160	730	335	450	-	100	-	200	150	200	-	550	450	240	180	M20	M24	400	180	65	140	277
200-200-540	200	200	160	730	400	560	-	150	-	250	190	200	-	650	450	240	180	M20	M24	400	180	65	140	309
250-200-410	250	200	180	730	400	560	-	150	-	250	190	200	-	650	500	240	180	M24	M24	400	250	65	140	386
250-200-480	250	200	180	730	400	560	-	150	-	250	190	200	-	650	500	240	180	M24	M24	400	250	65	140	420
250-200-610	250	200	180	730	440	580	-	150	-	300	240	200	-	700	500	240	180	M24	M24	400	250	65	140	477
250-250-360	250	250	180	530	400	560	-	150	-	250	190	-	-	650	550	-	-	M20	-	-	250	42	110	317
250-250-400	250	250	200	730	440	580	-	150	-	300	240	200	-	700	500	240	180	M24	M24	400	250	65	140	432
250-250-450	250	250	200	730	440	580	-	150	-	300	240	200	-	700	550	240	180	M24	M24	400	250	65	140	464
250-250-540	250	250	200	730	440	580	-	150	-	300	240	200	-	700	550	240	180	M24	M24	400	250	65	140	477

Multi-Stage High Pressure Pumps

Application

Water supply systems, pressure boosting, firefighting, boiler feed, irrigation and sprinkler installations, cooling water and hot water circulation, pressurisation in chemical, process and allied industries.

Liquids

Clean or slightly contaminated liquids up to 150 cSt (500mm^2/S) viscosity.

Duty Range

- Capacities up to 500 m^3/hr
- Heads up to 30 bar (cast iron) or up to 40 bar (special materials)
- Max. temperature 140°C

Construction

Multi-stage ring section pump of robust construction with extra-large shaft section for vibration-free running. For high output pressures additional axial thrust balancing is provided by a balancing piston mounted on a pump shaft.

All wearing parts are renewable without additional work on the casing parts.

Shaft sealing either with stuffing box packing or mechanical seal. Bearing housing are protected against the l ingress of spray water by means of lip seals.

Under difficult suction conditions (low NPSH-available), the pump can be provided with a axial inlet for cavitation-reducing flow entry pattern into the first stage impeller.

Axial Thrust Compensation

In pumps with a small number of stages, the ball bearings (fixed bearings) absorb the axial thrust. In pumps with a larger number of stages, the axial thrust is equalise by means of a balancing piston mounted on the shaft in the area of the delivery housing.

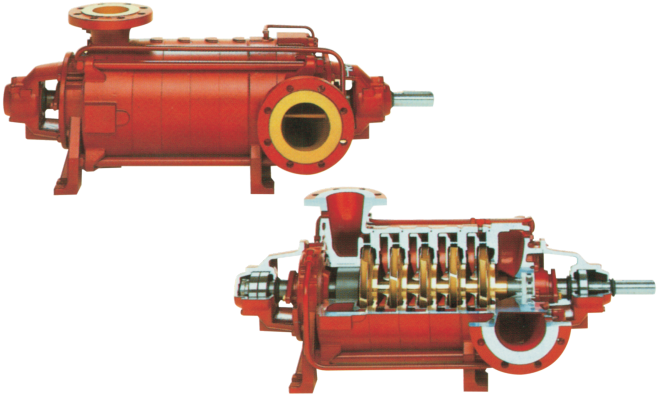

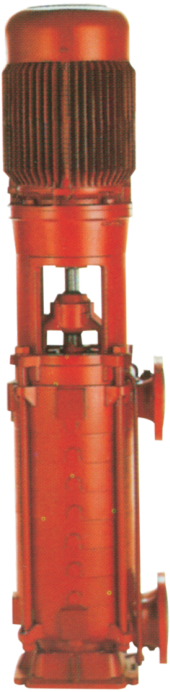

Sectional Drawing

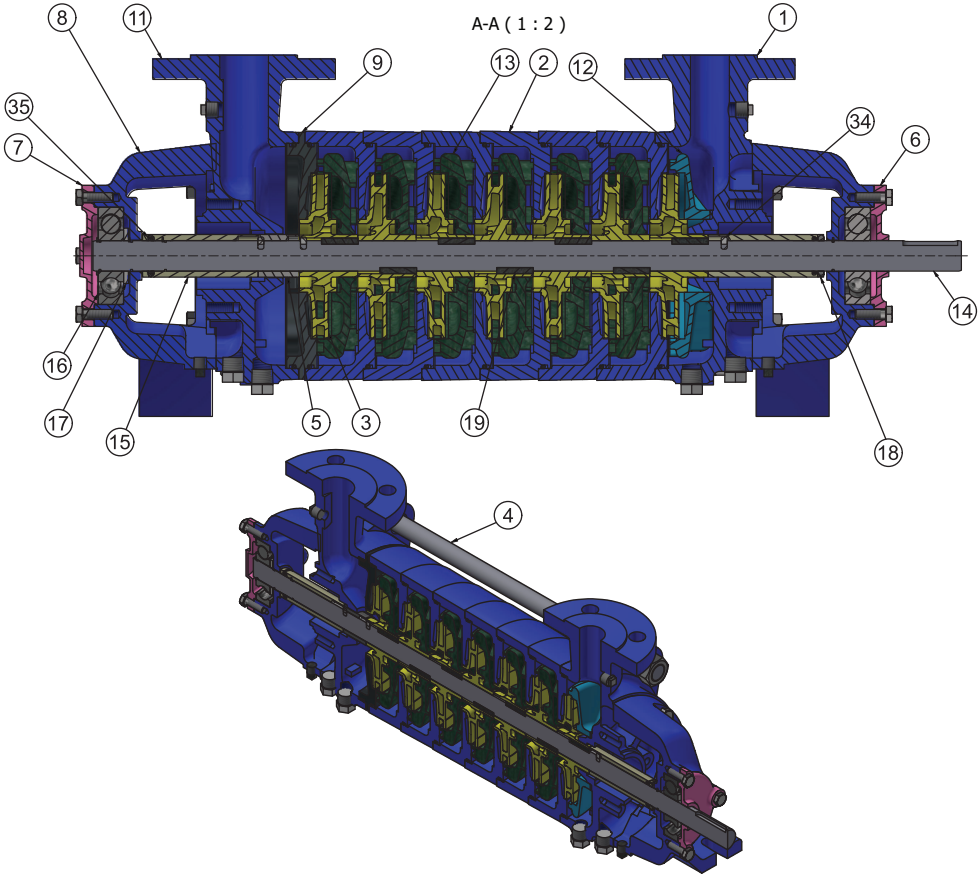

Parts List					
Item	QTY	Part	Item	QTY	Part
1	1	Suction Casing	12	1	Delivery Diffuser
2	6	Interstage Casing	13	6	Delivery Insert
3	7	Impeller	14	1	Shaft for Mech Seal
4	4	Tie Bar	15	2	Shaft Sleeve for Mech Seal
5	1	Distance Sleeve	16	2	Bearing
6	1	Bearing Cover DE	17	1	Bearing Spacer
7	1	Bearing Cover NDE	18	2	Sleeve Spacer
8	2	Bearing Housing	19	7	Impeller Key
9	1	Diffuser Cover Plate	34	3	Driving & Locating Peg
11	1	Delivery Casing	35	2	V Ring

Max. recommended velocities:
2m/s suction pipework,
3.5m/s delivery pipework.

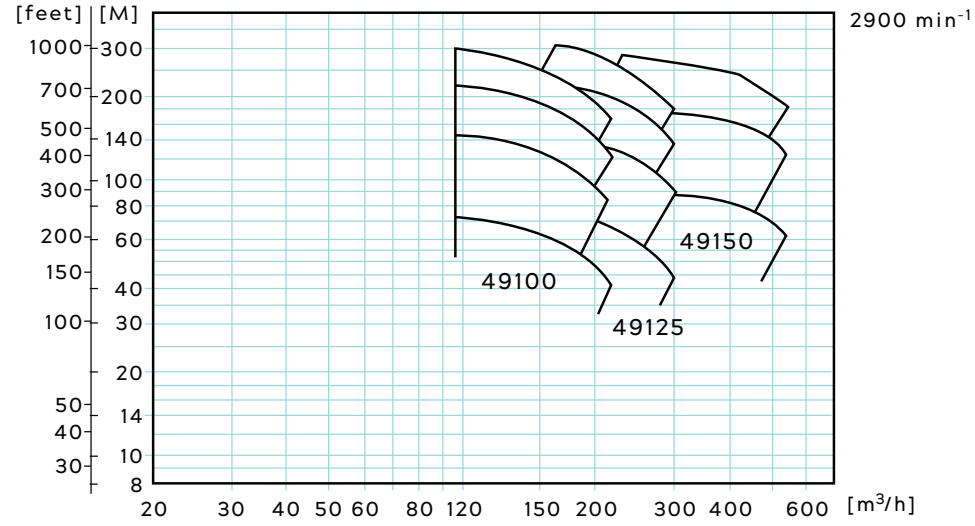

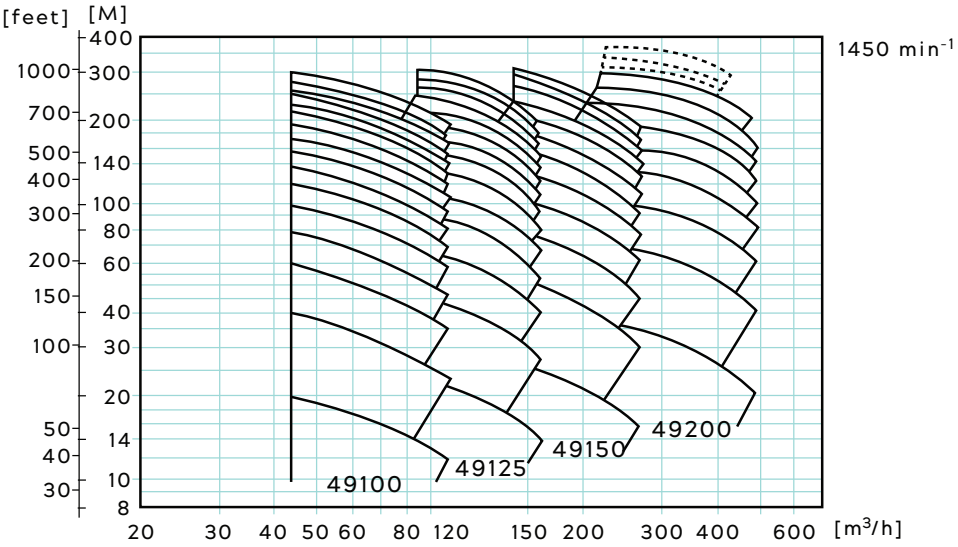

High Head Multi-Stage Pumps

Features

The PL/PJ range of multi-stage centrifugal pumps is designed for a wide range of high head duties at sustained highest efficiency.

The range was developed against a background of many years of practical experience and research; the pumps being particularly suitable for high life mine drainage duties, main line water supply application with formidable total heads to overcome, high pressure boiler feed pumps operating at elevated temperatures, for other general installations requiring substantial generated heads, allied to the well proven reliability and other special features of a heavy duty, ring-section design.

The selection charts on the following page shows the high generated heads achieved, with the stable characteristics offered by PL/PJ range, at the standard direct coupled motor speeds of 1 480r/min and 2 960 r/min obtained from a 50m Hz electrical supply. The pumps are also suitable for operations at other speeds, including those applying when direct coupled to 2 for pole motors fed from a 60Hz electrical supply.

The design further allows for direct drive from power recovery water turbines of the Pelton wheel type and for direct or indirect drive from virtually all other alternative forms of prime mover.

These pumps are of particular robust construction and embody the latest hydraulic design principles. The materials of construction are selected to ensure compatibility of rotating and stationary wearing parts combined with high corrosion and erosion resistance for prolonged life, sustained efficiency, reliability in service and low maintenance cost.

Construction

The sectional view of the typical PL/PJ pump shows the compact design of the unit. The pump is built from a number of stages and the bodies are held together by the main body bolts tying together the suction and delivery end covers which incorporate the main branches.

Each middle body is provided with feet so that the pump can be assembled in the horizontal position. This is advantageous especially underground where the space and working areas are limited. Horizontal assembly is further assisted by clamping bolts fitted between individual bodies to ensure the unit remains tight during the assembly work.

The bearing brackets and bearing bushes are designed with a horizontal split along the centre lone. This gives the advantage of being able to strip the bearing assembly without disturbing the alignment of the element and without having to remove the pump, half coupling or the driving unit. The bearing brackets are supported at the top and bottom, thereby avoiding distortion of bearing bush/shaft alignment when the pump is under pressure.

The balance valve cover is not disturbed when the F.E. bearing assembly is removed, thus avoiding the need to remove the gland packing and drain the complete pump. The body bolts are located in clearance holes drilled through the end covers and are fitted with nuts at each end. This avoids deterioration of threaded holes in the covers to receive the bolts. Bolts are spaced to avoid the pump branches and to not interfere with water passageways.

The balance valve assembly is designed to enable the wearing to enable the wearing parts to be replaced at minor cost; therefore, the stainless steel balance valve head will never have to be replaces as it is provided with a separate wear face. The balance valve seat and bush are two separate items which can avoid the need to replace both items at the same time. The impellers are retained on the shaft by an impeller lock-nut which is not disturbed during maintenance work on the balance valve assembly. This prevents inter stage leakage along the shaft developing due to separation of impeller hubs during such balance valve maintenance.

Material Specifications (Standard Pumps)
End overs - Cast Steel
Middle Bodies - Cast Steel
Shaft - Steel
Impellers - Phosphor Bronze
Diffusers - Phosphor Bronze
Return Channels - Cast Iron
Balance Valve Head - Stainless Steel
B.V. Face - Phosphor Bronze
B.V. Stalk - Phosphor Bronze
B.V. Seat - Bearing Bronze
B.V. Bush - Bearing Bronze
Neck Rings/Bushes - Bearing Bronze
Glands - Gun Metal
Sleeve Bearings - Bearing Bronze, White Metal Lined

Alternative Specifications

The pumps can also be offered with a wide range of alternative materials to suit special operating condition and customer's preference.

The running surface between the impeller necks and neck ring, impeller hubs and neck bushes, balance valve stalk and balance valve bush can be ceramic coated to reduce the wear and increase the life of these components.

The maximum permissible total axial wear on the balance valve face/seat is 3 to 4 mm and the life of these components can be increased by stellite coating the running surfaces of the balance valve face and the balance valve seat.

Upon request the conventional wear limit indicator can be replaced on the larger units by an electrical operated wear limit warning switch with provision for visual observation.

For the more specialised applications, e.g. boiler feed duties, features such as water cooled stuffing boxes can be incorporated in the design.

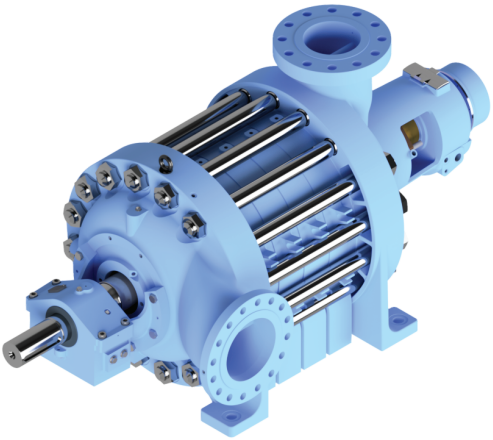

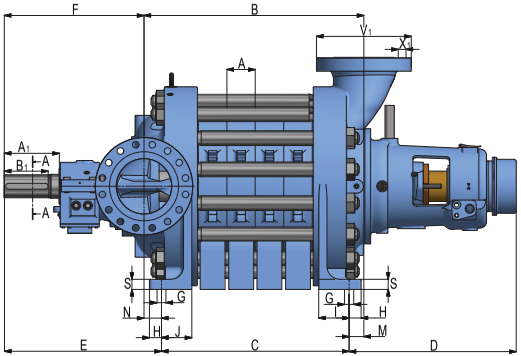

Side View

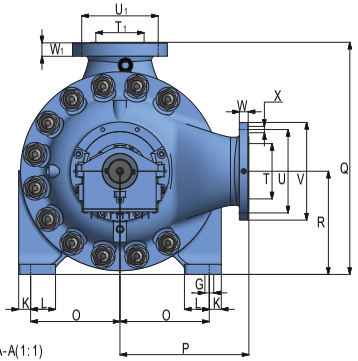

Drive End View

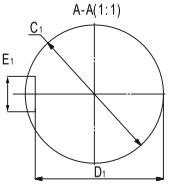

Shaft View

*Dimensions in millimeters

PL/PJ Ranges

Limitations on test pressure in kPa

Pump Size	BS 1452-1977 Grade 220 Cast Iron	BS 3100-1976 Grade A2 Carbon Steel	BS 3100-1976 Grade 316 C16 Stainless Steel
PL 80	4600	13000	8600
PL 100	6200	22000	16100
PL 150	6200	23000	16100
PL 200	6200	25900	18100
PJ 80	6200	9050	9050
PJ 100	4600	10000	10000
PJ 150	6200	13600	13400
PJ 200	6200	19400	14300
PJ 250	6200	20700	15300

It is recommended that the hydrostatic test pressure shall not be less than the greater of the following:
a) 150 Percent of pump rated pressure
b) 125 Percent of closed valve pressure

																			Shaft and Keyway Details					Suction Flange Details							Delivery Flange Details					
Model	A	B	C	D	E	F	G	H	I	J	K	L	M	N	O	P	Q	R	S	A1	B1	C1	D1	E1	T	U	V	W	X	No. of holes	BS 4504	T1	U1	V1	W1	X1	No. of holes
PL 80	75	578	638	370	349	377	24	30	48	48	29	51	32	28	200	300	540	240	22	110	80	44.537 44.526	38.5 38.3	16.000 15.957	80	180	230	36	26	8	160/1	80	180	230	36	26	8
PL 100	90	688	788	465	438	488	24	40	78	78	40	60	50	50	260	400	710	310	30	140	110	63.545 63.532	56.80 56.00	20.00 19.95	100	235	300	54	33	8	250/1	100	235	300	54	33	8
PL 150	105	799	871	547	511	549	24	88	84	84	35	65	34	38	308	458	811	353	35	140	110	69.800 69.750	61.00 60.80	22.00 21.95	150	320	390	68	36	12	250/1	150	320	390	68	36	12
PL 200	117	890	988	665	655	704	26	95	125	125	60	60	49	49	351	570	990	420	35	210	160	103.00 102.99	94.00 93.80	25.00 24.95	200	400	485	82	42	12	250/1	200	400	485	82	42	12
PJ 80	89	670.5	736.5	450	452	482	24	32	48	48	47	46	36	30	230	340	630	290	25	140	110	64.045 64.032	56.6 56.4	20.000 19.948	80	170	215	28	22	8	64/1	80	170	215	28	22	8
PJ 100	106	810	859	532	503	521	24	52	68	68	39	61	31	18	300	430	780	350	25	140	110	75.045 75.032	67.50 67.30	20.000 19.948	100	210	265	40	30	8	160/1	100	210	265	40	30	8
PJ 150	126	937	1034	612	555	603	35	60	90	90	70	60	49	48	325	520	925	405	30	170	140	85.052 85.037	76.0 76.8	25.000 24.948	150	290	355	44	33	12	100/1	150	290	355	44	33	12
PJ 200	142	1115	1275	661	635	712.5	35	80	100	100	75	75	82.5	77.5	396	564	1045	481	40	210	160	110.035 110.013	100.0 99.8	28.000 27.948	200	360	430	52	36	12	100/1	200	360	430	52	36	12
PJ 250 H	155	1350	1387	767	852	757	48	65	165	165	65	135	80	95	485	700	1260	560	45	299	238	125	116	32	301	230	530	52	36	16	-	250	430	515	76	42	12
PJ 250 AS-AN	155	1191	1341	747	737	805	35	80	120	110	85	85	82	68	445	700	1240	540	45	290	240	145.061 145.043	132.00 131.70	40.000 39.938	250	430	515	68	42	12	160/1	250	430	515	68	42	12
PJ 250 BS	164	1265	1455	821	736	844	35	80	120	140	85	85	82	108	445	700	1240	540	45	290	240	140.061 140.043	127.00 126.70	40.000 39.938	300	500	585	78	42	16	160/1	250	430	515	68	42	12

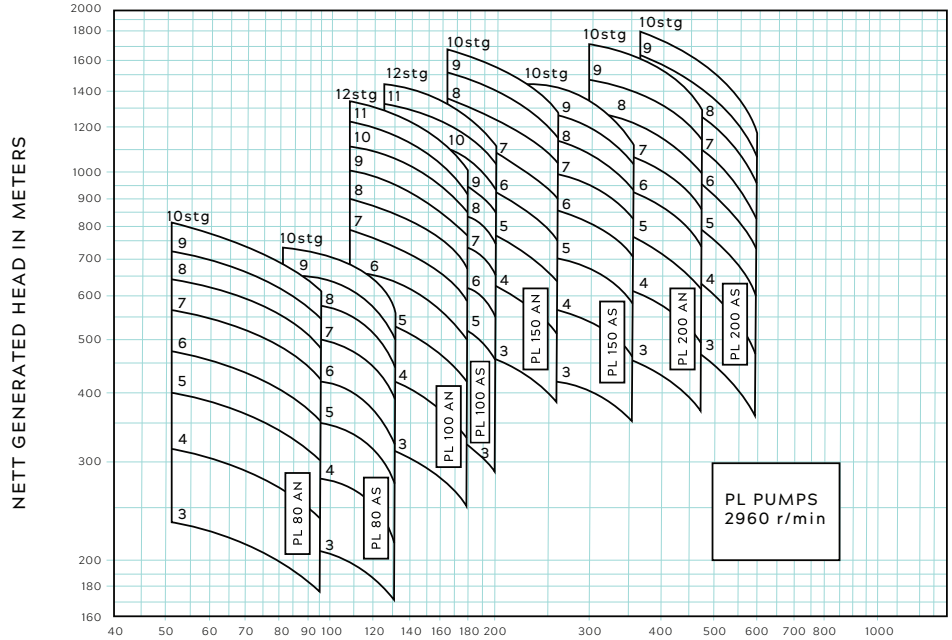
NETT GENERATED HEAD IN METERS
CAPACITY IN CUBIC METRES PER HOUR
PL 80 AN
PL 80 AS
PL 100 AN
PL 100 AS
PL 150 AN
PL 150 AS
PL 200 AN
PL 200 AS
PL PUMPS
2960 r/min

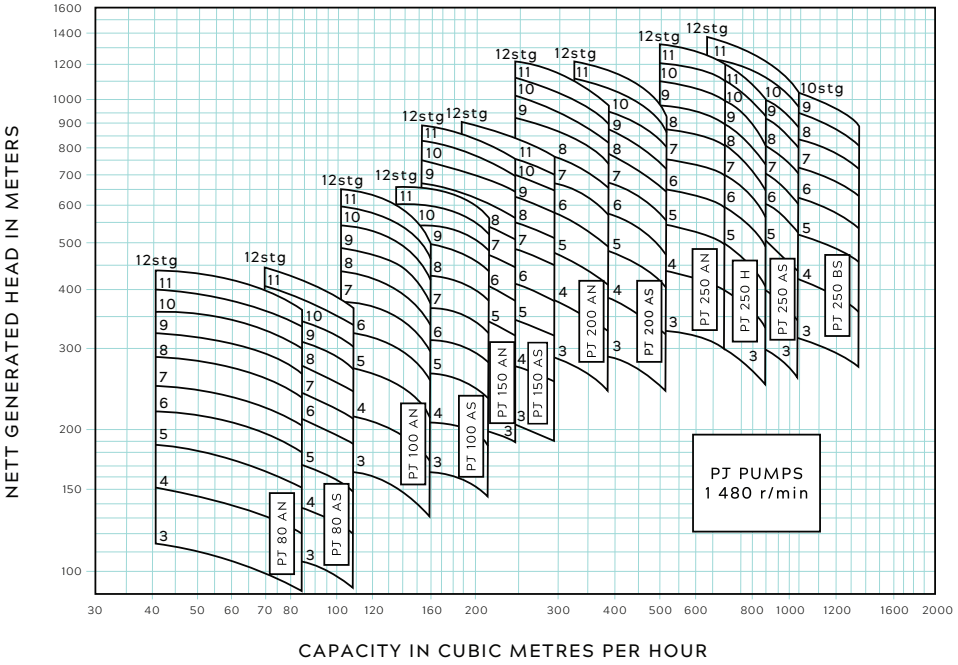
NETT GENERATED HEAD IN METERS
CAPACITY IN CUBIC METRES PER HOUR
PJ 80 AN
PJ 80 AS
PJ 100 AN
PJ 100 AS
PJ 150 AN
PJ 150 AS
PJ 200 AN
PJ 200 AS
PJ 250 AN
PJ 250 H
PJ 250 AS
PJ 250 BS
PJ PUMPS
1 480 r/min

Friction in PVC Pipes to SABS 966:1969

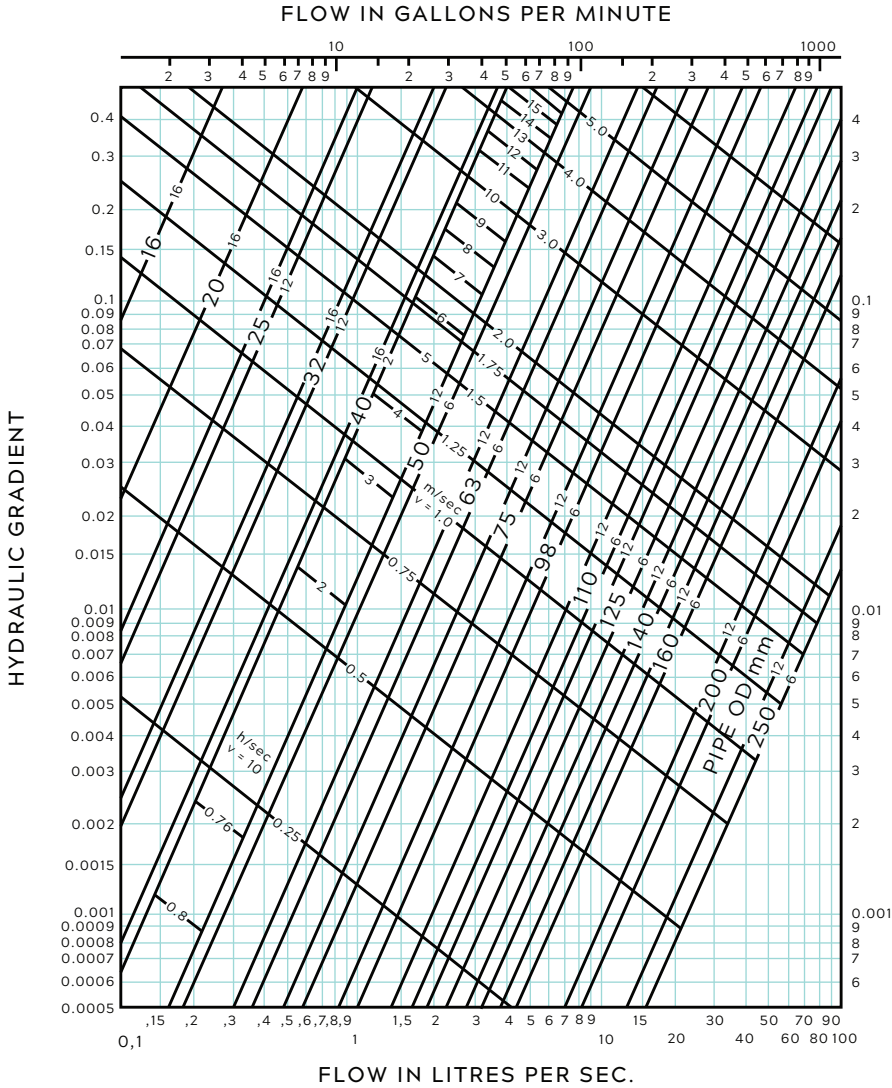

i = hydraulic gradient
Q = flow in litres per sec
d = actual bore in mm

$$i = 0.829 \times 10^{6} \frac{Q^{1.75}}{d^{4.75}}$$

Friction in Steel Pipes to SABS 62:1970

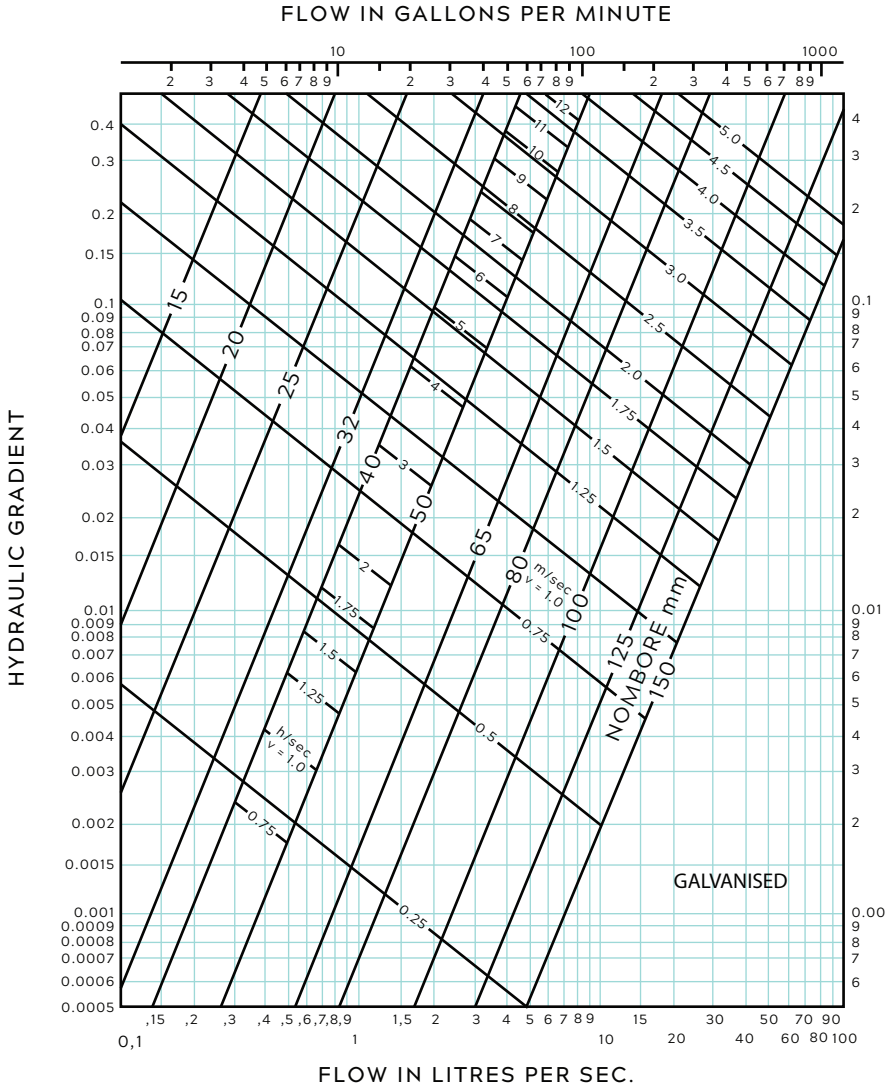

i = hydraulic gradient
Q = flow in litres per sec
d = actual bore in mm

$$i = 5.09 \times 10^{6} \frac{Q^{1.92}}{d^{5.13}}$$

Friction in Steel Pipes to SABS 62:1970

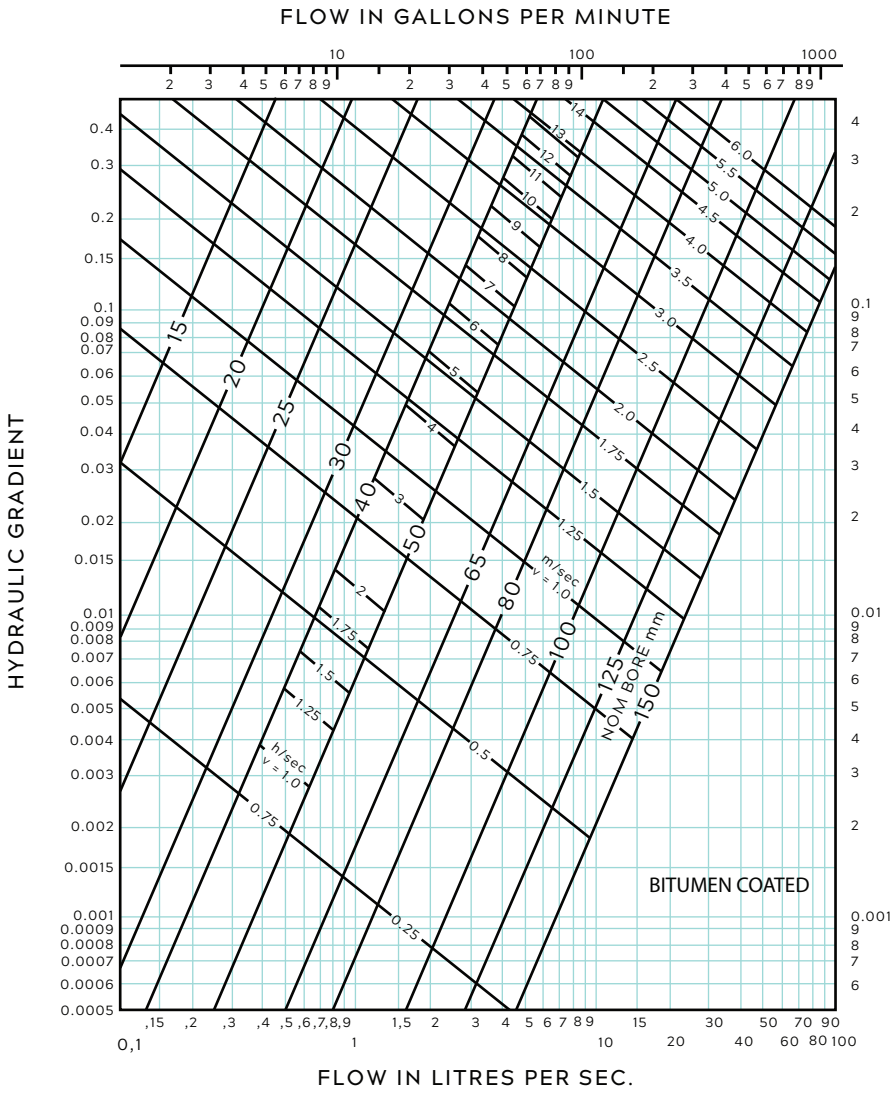

i = hydraulic gradient
Q = flow in litres per sec
d = actual bore in mm

$$i = 2.24 \times 10^{6} \frac{Q^{1.85}}{d^{4.96}}$$

Friction in Steel Pipes to SABS 62:1970

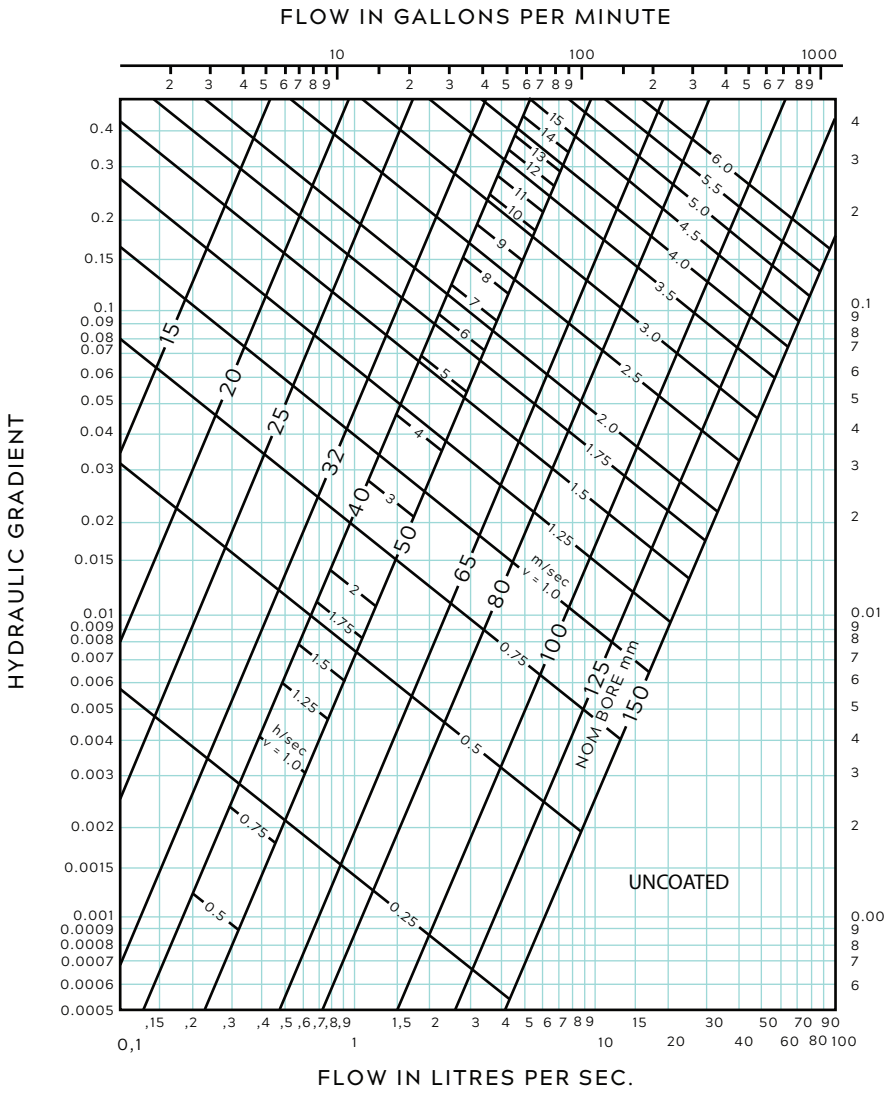

i = hydraulic gradient
Q = flow in litres per sec
d = actual bore in mm

$$i = 1.36 \times 10^{6} \frac{Q^{1.8}}{d^{4.83}}$$

Pump Selection

Factors that must be considered in standard pump installations which involve clear water at normal temperature are familiar to salespersons, technicians and engineers who work with pumping equipment but there are many installations that have an uncommon nature presenting which needs to be considered in more detail. These types of installations should be referred to pump specialists and manufactures.

The pump selection, installation and planning needs to be considered carefully. A trouble free, efficient and longer service creates a better economy. The following factors must be taken into consideration when selecting a pump:

The liquid

If not clear water, then define and consider:

- Liquid type
- Specific gravity
- Viscosity
- Temperature
- Solids content

The installations

Consider:

- The liquid supply and availability
- The required pumping capacity
- The total dynamic head
- The suction conditions
- The prime mover and type of drive

Other factors

- Type of shaft or packed gland
- Pump materials of construction
- Pump rotation speed
- Available net positive suction head
- Required net positive suction head
- Connecting pipe sizes
- Pipe line anchors and flexible connections
- Pipe line valves
- Electric power supply and limitations
- Testing of pumps.

Centrifugal Pump Performance Characteristic Relationships

The head-volume performance curve of a pump for a different speed, may be determined from a given speed performance, by applying the following relationships.

If output Q, head H and power absorbed P, are known for given speed N, the q, h, p, corresponding to a new speed n may be calculated from the following equations.

$$\frac{Q}{q} = \frac{N}{n} \text{ therforce, } q = \frac{Qn}{N}$$

$$\frac{H}{h} = \frac{N^2}{n^2} \text{ therforce, } h = \frac{Hn^2}{N^2}$$

$$\frac{P}{p} = \frac{N^2}{n^2} \text{ therforce, } p = \frac{Pn^2}{N^2}$$

Quick calculations can be made on a slide rule, as follows:

- Set n on scale C against n on scale D
- Read off q on scale C opposite Q on scale D
- Read off h on scale B opposite H on scale A

Net Positive Suction Head (NPSH)

Test book definitions whilst strictly correct they can be confusing and difficult to take in and understand fully.

A typical definition of this type is:
- The suction head (Gauge pressure at the suction flange, corrected to the pump centre line, plus velocity head), minus the gauge vapour pressure of the liquid at pumping temperature.

What does this mean in simple terms?
There are two values of NPSH that must be considered:
First - the NPSH that is available at site and
Secondly - the NPSH that is required by the pump if it is to operate in accordance with its performance curves.

Available NPSH

If a centrifugal pump suction is connected via a pipe line to liquid supply, flow into the pump is caused by:
- Creation of low pressure within the pump by the action of the impeller
- Atmospheric pressure on the liquid surface
- The static position of the liquid in relation to the ump (this may be positive or negative)

At the same time, resistance to flow is caused by:
- Friction between to flow is caused by
- Vaporisation of the liquid at low pressure (breaking of the liquid column)

Hence, the available NPSH at a particular site is:
- Atmospheric pressure at site, plus (or minus) the vertical height if the liquid surface above (or below) the pump centre line (horizontal pumps), or pump impeller bottom (vertical pumps), minus friction loss in the suction pipe line, minus the vapour pres sure of the liquid under site conditions of altitude and temperature.

The net result is a total pressure head which is available at site to force the liquid through the suction line into the pump when low pressure is created within the pumps suction.

Required NPSH

This is a design characteristic of the pump and represents the lowest value of the NPSH on which the particular pump will operate without loss of performance.

General Information

Power

Kilowatt kw	Horsepower hp	Pferdestearke ps	Cheval Vapeur cv	Foot Pounds/Sec ft lbs/sec
1	1,340	1,359	1,359	737
0,746	1	1,014	1,014	550
0,736	0,986	1	1	542
0,00136	0,00182	0,00184	0,00184	1

Heat

1 kw h = 341 btu = 1,340 hp hours = 859,6 kcal
1 therm = 100 000 btu = 29,3 kwh = 25 200 kcal

Area

Hectare ha	Sq Metre m^2	Sq Kilometre km^2	Sq Feet sq ft	Sq Yard sq yd	Sq Mile sq ml	Acres
1	-	0,01	-	-	-	2,471
-	1	-	10,764	1,196	-	-
100	10^6	1	-	-	0,386	247
-	0,093	-	1	0,111	-	-
-	0,836	-	9	1	-	-
259	-	2,590	-	-	1	640
0,405	$4,05x10^3$	0,004	-	-	-	1

Volume

Litre l	Cubic Metre m^3	Cubic Foot cu ft	UK Gallon gall	USA Gallon gall	American Barrel (oil)
1	0,001	0,035	0,220	0,264	0,006
1000	1	35,315	219,97	264,17	6,290
28,317	0,028	1	6,229	7,481	0,178
4,546	0,005	0,161	1	1,201	0,029
3,785	0,004	0,134	0,833	1	0,024
158,99	0,159	1,615	34,973	42	1

Pressure/Head

Metre (Water) m	Feet ft	Inches (Hg) in	Kilopascal kPa	Pound - Force/ Sq cm kg/cm^2	Kilogram/ Sq cm kg/cm^2	Atmosphere	Bar
1	3,281	2,893	9,805	1,422	0,099	0,097	0,098
0,305	1	0,883	2,992	0,434	0,031	0,030	0,030
0,345	1,133	1	3,387	0,491	0,035	0,033	0,034
0,102	0,335	0,295	1	0,145	0,010	0,010	0,010
0,704	2,310	2,036	6,895	1	0,070	0,068	0.069
10,010	32,840	28,960	98,130	14,223	1	0,968	0,981
10,340	33,930	29,920	101,370	14,700	1,033	1	1,013
10,190	33,400	29,500	100,000	14,503	1,019	0,986	1

Capacity/Flow - (Water, 15 C,SG = 1)

Litres/Sec l/s	Gallons/Min gpm (UK)	Gallons/Min gpm (USA)	Cu ft/sec cusec	Cu Metres/Hr m^3/h	Mil Gallons/Day mg/d (UK)
1	13,2	15,85	0,035	3,6	0,019
0,076	1	1,2	0,0027	0,0273	0,0014
0,063	0,833	1	0,0022	0,227	0,0012
28,3	374	449	1	102	0,539
0,278	3,67	4,40	0,0098	1	0,0053
52,6	695	834	1,858	189,5	1

Mass

Kilogram kg	Metric Ton	Long Ton	Short Ton	Pound lb
1	0,001	0,00098	0,0011	2,205
1000	1	0,9842	1,102	2205
1016	1,016	1	1,12	2240
907,2	0,9072	0,8929	1	2000
0,4536	-	-	0,0005	1

Vapour Pressure Chart

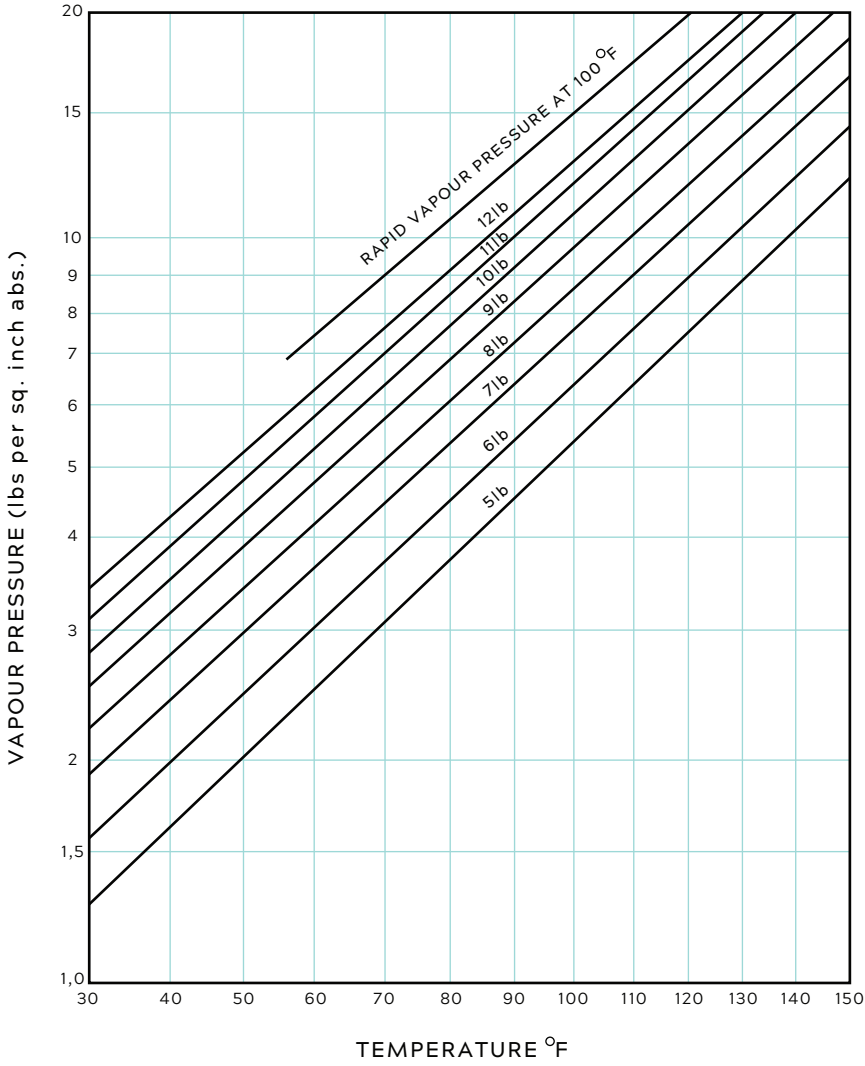

Company Details

Local Content

The local content varies from product to product, and is optimized to produce the most cost effective quality solution.customization to suit customer needs makes it possible to augment the standard and product range.

APE Pumps (Pty) Ltd.

Reg No. - 2007/014880/07
VAT No. - 4070243680

Physical Address
26 Nagington Road
Wadeville
Germiston
1400
South Africa

Postal Address
PO Box 14733
Wadeville
1422
South Africa

Telephone Number
+27 11 824 4810

Email Address
info@apepumps.co.za

Directors
P. Agarwal (Managing Director)
P. Robinson (Director)
K.K. Ganeriwala (Director)
H.Nirmal (Director)

Auditors
Van Wyk Compton Incorporated
Tel No. +27 11 867 6661

Mather and Platt

Reg No. - 2008/023117/07
VAT No. - 4760252496

Physical Address
26 Nagington Road
Wadeville
Germiston
1400
South Africa

Postal Address
PO Box 14733
Wadeville
1422
South Africa

Telephone Number
+27 11 824 4810

Email Address
info@matherandplatt.com

PSV Zambia Ltd.

Physical Address
Plot 4065
Mulilakwenda Road
Industrial Area
Kitwe
Zambia

Telephone Number
+260 21 221 4137

Email Address
psv@zamnet.zm


www.apepumps.co.za | 011 824 4810 | www.matherandplatt.com